NEPAL ELECTRICITY AUTHORITY

(An Undertaking of Government of Nepal)

DISTRIBUTION AND CONSUMER SERVICE DIRECTORATE

Pokhara Regional Office

Baglung Distribution Centre

Rural Electrification Works (Construction of HT/LT Line and Installation of Transformer) at

Pandhavkhani VDC (former)

Sealed Quotation No.: **BDC-073/74-07 SQ**

Last Date of Purchasing Bid: 2074/03/01 Office hours
Last Date of Bid Submission and opening: 2074/03/02 12:00hrs
Bid Opening date: 2074/03/02 14:00 hrs

Issued by:

Nepal Electricity Authority

Distribution and Consumer Services Directorate

Baglung Distribution Centre

Baglung Bazaar, Baglung

Tel. : + 977 (068) - 520820

Fax : + 977 (068) - 522477

June 2017

TABLE OF CONTENTS

SECTION I.	INVITATION FOR SEALED QUOTATION	3
SECTION II.	INSTRUCTIONS TO BIDDERS	4
SECTION III.	SAMPLE FORMS OF BID, ELIGIBILITY INFORMATION, LETTER OF ACCEPTANCE AND AGREEMENT	9
SECTION IV.	GENERAL CONDITIONS OF CONTRACT (GCC)	12
SECTION V.	SPECIAL CONDITIONS OF CONTRACT (SCC)	22
SECTION VI.	TECHNICAL SPECIFICATION	24
SECTION VII.	DRAWINGS	25
SECTION VIII.	BILL OF QUANTITIES	40
SECTION IX.	FORMS OF SECURITIES	42
SECTION X.	SPECIAL INSTRUCTION TO BIDDERS FOR E-BIDDING	45

Section I. Invitation for Sealed Quotation

नेपाल विद्युत प्राधिकरण
वितरण तथा ग्राहक सेवा निर्देशनालय
पोखरा क्षेत्रीय कार्यालय
बागलुङ्ग वितरण केन्द्र

सिलबन्दी दरभाउपत्र आह्वानको सूचना

(प्रथमपटक प्रकाशित मिति २०७४/०२/१८)

पोखरा क्षेत्रीय कार्यालय अन्तर्गतको बागलुङ्ग वितरण केन्द्रमा तपसिलअनुसारको कार्य गर्न नेपाल सरकारबाट सम्बन्धीत कार्यको इजाजत प्राप्त मूल्य अभिवृद्धि करमा दर्ता भएका आयकर तिरेका, फर्म नविकरण तथा अद्यावधिक भएका फर्म कम्पनीहरुबाट निम्न लिखित सर्तहरूमा रही सिलबन्दी दरभाउपत्र आह्वान गरिएको छ ।

तपसिलः

सिलबन्दी दरभाउपत्र नं.	कामको बिबरण	सिलबन्दी दरभाउपत्र खरिद गर्ने अन्तिम मिति र समय	सिलबन्दी दरभाउपत्र दाखिला गर्ने र खोल्ने अन्तिम मिति र समय	सिलबन्दी दरभाउपत्र खरिद र दाखिला गर्ने कार्यालय र सम्पर्क नं	सिलबन्दी दरभाउपत्र फाराम दस्तुर	बैंक खाता नं.	जमानीपत्रको रकम र म्याद
BDC-2073/74-02 (SQ)	बागलुङ न.पा. क्षेत्रमा एच.टी./एल.टी. लाईन विस्तार कार्य	२०७४।०३।०१ गते कार्यालय समयभित्र	दाखिला गर्ने २०७४।०३।०२ गते दिनको १२:०० बजे र खोल्ने समय २:०० बजे	बागलुङ वितरण केन्द्र, बागलुङ फोन नं. ०६८-५२०८२०	५००/- (बागलुङ वितरण केन्द्रको विविध काउण्टरबाट)	नेपाल बैंक लि. धरौटी खाता नं. २२-११-४४६५	रु. ११,०००/- र ७५ दिन
BDC-2073/74-03 (SQ)	साबिक बिहुकोट गा.वि.स.मा एच.टी./एल.टी. लाईन विस्तार कार्य	२०७४।०३।०१ गते कार्यालय समयभित्र	दाखिला गर्ने २०७४।०३।०२ गते दिनको १२:०० बजे र खोल्ने समय २:०० बजे	बागलुङ वितरण केन्द्र, बागलुङ फोन नं. ०६८-५२०८२०	५००/- (बागलुङ वितरण केन्द्रको विविध काउण्टरबाट)	नेपाल बैंक लि. धरौटी खाता नं. २२-११-४४६५	रु. १२,०००/- र ७५ दिन
BDC-2073/74-04 (SQ)	साबिक दुदिलाभाटी गा.वि.स.मा एच.टी./एल.टी. लाईन विस्तार कार्य	२०७४।०३।०१ गते कार्यालय समयभित्र	दाखिला गर्ने २०७४।०३।०२ गते दिनको १२:०० बजे र खोल्ने समय २:०० बजे	बागलुङ वितरण केन्द्र, बागलुङ फोन नं. ०६८-५२०८२०	५००/- (बागलुङ वितरण केन्द्रको विविध काउण्टरबाट)	नेपाल बैंक लि. धरौटी खाता नं. २२-११-४४६५	रु. १२,०००/- र ७५ दिन
BDC-2073/74-05 (SQ)	साबिक रिघा गा.वि.स.मा एच.टी./एल.टी. लाईन विस्तार कार्य	२०७४।०३।०१ गते कार्यालय समयभित्र	दाखिला गर्ने २०७४।०३।०२ गते दिनको १२:०० बजे र खोल्ने समय २:०० बजे	बागलुङ वितरण केन्द्र, बागलुङ फोन नं. ०६८-५२०८२०	५००/- (बागलुङ वितरण केन्द्रको विविध काउण्टरबाट)	नेपाल बैंक लि. धरौटी खाता नं. २२-११-४४६५	रु. १४,०००/- र ७५ दिन
BDC-2073/74-06 (SQ)	साबिक काडेबास गा.वि.स.मा एच.टी./एल.टी. लाईन विस्तार कार्य	२०७४।०३।०१ गते कार्यालय समयभित्र	दाखिला गर्ने २०७४।०३।०२ गते दिनको १२:०० बजे र खोल्ने समय २:०० बजे	बागलुङ वितरण केन्द्र, बागलुङ फोन नं. ०६८-५२०८२०	५००/- (बागलुङ वितरण केन्द्रको विविध काउण्टरबाट)	नेपाल बैंक लि. धरौटी खाता नं. २२-११-४४६५	रु. २५,०००/- र ७५ दिन
BDC-2073/74-07 (SQ)	साबिक पाण्डवखानी गा.वि.स.मा एच.टी./एल.टी. लाईन विस्तार तथा ट्रान्सफरमर जडान कार्य	२०७४।०३।०१ गते कार्यालय समयभित्र	दाखिला गर्ने २०७४।०३।०२ गते दिनको १२:०० बजे र खोल्ने समय २:०० बजे	बागलुङ वितरण केन्द्र, बागलुङ फोन नं. ०६८-५२०८२०	५००/- (बागलुङ वितरण केन्द्रको विविध काउण्टरबाट)	नेपाल बैंक लि. धरौटी खाता नं. २२-११-४४६५	रु. २५,०००/- र ७५ दिन
BDC-2073/74-08 (SQ)	साबिक राङखानी गा.वि.स.मा एच.टी./एल.टी. लाईन विस्तार कार्य	२०७४।०३।०१ गते कार्यालय समयभित्र	दाखिला गर्ने २०७४।०३।०२ गते दिनको १२:०० बजे र खोल्ने समय २:०० बजे	बागलुङ वितरण केन्द्र, बागलुङ फोन नं. ०६८-५२०८२०	५००/- (बागलुङ वितरण केन्द्रको विविध काउण्टरबाट)	नेपाल बैंक लि. धरौटी खाता नं. २२-११-४४६५	रु. २०,०००/- र ७५ दिन
BDC-2073/74-09 (SQ)	मालढुङ्गा देखि भकुण्डेसम्म एच.टी./एल.टी. लाईन विस्तार कार्य	२०७४।०३।०१ गते कार्यालय समयभित्र	दाखिला गर्ने २०७४।०३।०२ गते दिनको १२:०० बजे र खोल्ने समय २:०० बजे	बागलुङ वितरण केन्द्र, बागलुङ फोन नं. ०६८-५२०८२०	५००/- (बागलुङ वितरण केन्द्रको विविध काउण्टरबाट)	नेपाल बैंक लि. धरौटी खाता नं. २२-११-४४६५	रु. ५,०००/- र ७५ दिन
BDC-2073/74-10 (SQ)	साबिक सल्यान गा.वि.स.मा एच.टी./एल.टी. लाईन विस्तार कार्य	२०७४।०३।०१ गते कार्यालय समयभित्र	दाखिला गर्ने २०७४।०३।०२ गते दिनको १२:०० बजे र खोल्ने समय २:०० बजे	बागलुङ वितरण केन्द्र, बागलुङ फोन नं. ०६८-५२०८२०	५००/- (बागलुङ वितरण केन्द्रको विविध काउण्टरबाट)	नेपाल बैंक लि. धरौटी खाता नं. २२-११-४४६५	रु. १२,०००/- र ७५ दिन
BDC-2073/74-11 (SQ)	साबिक सर्कुबा गा.वि.स.मा एच.टी./एल.टी. लाईन विस्तार कार्य	२०७४।०३।०१ गते कार्यालय समयभित्र	दाखिला गर्ने २०७४।०३।०२ गते दिनको १२:०० बजे र खोल्ने समय २:०० बजे	बागलुङ वितरण केन्द्र, बागलुङ फोन नं. ०६८-५२०८२०	५००/- (बागलुङ वितरण केन्द्रको विविध काउण्टरबाट)	नेपाल बैंक लि. धरौटी खाता नं. २२-११-४४६५	रु. १३,०००/- र ७५ दिन
BDC-2073/74-12 (SQ)	साबिक पयुवन्थाप गा.वि.स.मा एच.टी./एल.टी. लाईन विस्तार कार्य	२०७४।०३।०१ गते कार्यालय समयभित्र	दाखिला गर्ने २०७४।०३।०२ गते दिनको १२:०० बजे र खोल्ने समय २:०० बजे	बागलुङ वितरण केन्द्र, बागलुङ फोन नं. ०६८-५२०८२०	५००/- (बागलुङ वितरण केन्द्रको विविध काउण्टरबाट)	नेपाल बैंक लि. धरौटी खाता नं. २२-११-४४६५	रु. २२,०००/- र ७५ दिन
BDC-2073/74-13 (SQ)	साबिक अमर भूमी गा.वि.स.मा एच.टी./एल.टी. लाईन विस्तार कार्य	२०७४।०३।०१ गते कार्यालय समयभित्र	दाखिला गर्ने २०७४।०३।०२ गते दिनको १२:०० बजे र खोल्ने समय २:०० बजे	बागलुङ वितरण केन्द्र, बागलुङ फोन नं. ०६८-५२०८२०	५००/- (बागलुङ वितरण केन्द्रको विविध काउण्टरबाट)	नेपाल बैंक लि. धरौटी खाता नं. २२-११-४४६५	रु. ११,०००/- र ७५ दिन
BDC-2073/74-14 (SQ)	साबिक अर्गल गा.वि.स.मा एच.टी./एल.टी. लाईन विस्तार तथा ट्रान्सफरमर जडान कार्य	२०७४।०३।०१ गते कार्यालय समयभित्र	दाखिला गर्ने २०७४।०३।०२ गते दिनको १२:०० बजे र खोल्ने समय २:०० बजे	बागलुङ वितरण केन्द्र, बागलुङ फोन नं. ०६८-५२०८२०	५००/- (बागलुङ वितरण केन्द्रको विविध काउण्टरबाट)	नेपाल बैंक लि. धरौटी खाता नं. २२-११-४४६५	रु. १६,०००/- र ७५ दिन

नोट : सिलबन्दी दरभाउपत्र दाखिला गर्ने र खोल्ने मितिमा सार्वजानिक विदा पर्न गएमा विदा समाप्त भएको भोलिपल्टको मितिमा दाखिला एवं खोल्ने कार्य हुनेछ ।

Section II. Instructions to Bidders

1. Scope of Works

The Employer stated in the Invitation for Sealed Quotation invites bids for the construction of works as detailed in attached specifications, drawings and the bill of quantities provided herein. .

2. Eligible Bidder

This Invitation for Bids is open to all registered contractors with qualifications as described below:

a) Up to date Firm/Company Registration Certificate
b) VAT and PAN Registration Certificates
c) Tax Clearance Certificate
d) A written declaration made by the Bidder stating that the Bidder is not ineligible to participate in the bid; has no conflict of interest in the bid procu8rement proceedings and has not been punished for the profession or business related offence.
e) Power of Attorney
f) Other documents as needed

.

3. One Bid per Bidder

Each Bidder shall submit only one quotation. A Bidder who submits more than one quotation shall cause all the quotations with the Bidder's participation to be disqualified.

4. Cost of Bidding

The Bidder shall bear all costs associated with the preparation and submission of his bid and the Employer shall in no case be liable for those costs.

5. Site Visit

The Bidder at his own cost, responsibility and risk may visit the site of the works and acquire all necessary information for preparing the bid and entering into a contract for construction of the works.

6. Content of Quotation Form

The Quotation Form comprise the documents listed below:

Invitation for Sealed Quotations

Instructions to Bidders

Forms of Bid, Letter of Acceptance and Agreement

General Conditions of Contract (GCC)

Special Conditions of Contract (SCC)

Technical Specification

Drawings

Bill of Quantities

Sample Forms of Securities

7. Clarification

A prospective Bidder may obtain clarification on the Quotation Form from the Employer.

8. Language of Bid

All documents relating to the bid shall be in English or in Nepali.

9. Documents Comprising Bid

The bid by the Bidder shall comprise the following:

a. Bid and Eligibility Information

b. Bid Security

c. Priced Bill of Quantities

10. Bid Prices

The contract shall be for the whole works described in scope of works based on the priced Bill of Quantities submitted by the Bidder. The Bidder shall fill in rates and prices for all items of the works in Nepali Rupees. Items for which no rate or price is entered shall be deemed covered by the other rates and prices in the Bill of Quantities and shall not be paid separately by the Employer.

All duties, taxes and other levies payable by the contractor under the contract shall be included in the rates, prices and total Bid Price submitted by the Bidder.

11. Bid Validity

The Bid shall remain valid for the period of **45** days after opening of the quotation.

12. Bid Security

The Bidder shall furnish a Bid Security in Nepali Rupees **25,000.00**. The Bid Security shall remain valid for a period of **75** days after opening of the quotation.

The Bid Security shall be in the form of cash voucher deposited in the Bank Account of the Employer specified in the notice for "Invitation for Quotation" or a bank guarantee from a bank acceptable to the Employer.

13. Format and Signing of Bids

The bid shall be typed or written in indelible ink and shall be signed by an authorized person. Any entries or amendments including alternations, additions or corrections made shall be initialed by the same authorized person.

14. Sealing and Marking of Bids

The Bidder shall submit his bid in sealed envelopes. The envelope shall be addressed to the Employer specified in the Invitation for Quotation and shall bear the name and identification number of the quotation.

15. Deadline for Submission of Bids

Bids shall be delivered to the Employer at the address no later than the time and date specified in the Invitation for Quotation.

16. Late Bids

Any bid received by the Employer after the deadline shall not be accepted and shall be returned unopened to the Bidder upon request.

17.Modification and Withdrawal of Bids

Sealed Quotations (except e-bidding) once submitted shall be withdrawn or modified prior to 24 hours the deadline time for submission of Bid Document.

18. Bid Opening

The Employer shall open the bids in the presence of the Bidders' representatives who choose to attend at the time and in the place as specified in the Invitation for Quotation.
The Employer shall prepare and provide minutes of the bid opening including the information disclosed to those present.

19. Process to be Confidential

Information relating to the examination, evaluation and comparison of bids and recommendations for the award of a contract shall not be disclosed to Bidders or any other persons not officially concerned with such process until the award to the successful Bidder has been announced. Any efforts by the Bidder to influence the Employer in the bid evaluation, bid comparison or contract award decisions may

result in rejection of Bidder's bid.

20. Examination of Bids

Prior to the detailed evaluation of Bids, the Employer shall determine whether each bid (a) meets the eligibility criteria defined in Clause 2; (b) has been properly signed; (c) is accompanied by the required securities; and (d) is substantially responsive to the requirements of the Bidding documents.

21. Evaluation and Comparison of Bids

21.1 In evaluating the Bids, the Employer shall determine for each bid the evaluated Bid Price by adjusting any corrections for errors. Bids shall be checked by the Employer for any arithmetic errors. Errors shall be corrected by the Employer as follows:

a. where there is a discrepancy between the amounts in figures and in words, the amount in words shall govern; and

b. where there is a discrepancy between the unit rate and the line item total resulting from multiplying the unit rate by the quantity, the unit rate as quoted shall govern

21.2 If the Bidder does not accept the corrected amount, the bid shall be rejected and the Bid Security may be forfeited.

22. Award of Contract

22.1 The Employer shall decide the award of the contract to the Bidder whose bid is within the approved estimate and who has offered the lowest evaluated Bid Price within 15 days of the opening of the quotation, provided that such Bidder has been determined to be eligible in accordance with the provisions of Clauses 2.

22.2 If the bid, which results in the lowest Evaluated Bid price, is unbalanced or frontloaded in relation to the Employer's estimate of the items of Work to be performed under the contract, the Employer shall ask the bidder to give clarification with detailed rate analysis for any or all items of the Bill of Quantities. If the clarification is found satisfactory then the Employer shall increase at the expense of the bidder the performance security set forth in Clause 25 by an additional 8% of the quoted amount to protect the Employer against financial loss in the event of defaults of the successful bidder under the contract and if the clarification is found unsatisfactory then the Employer may reject such bid.

23. Employer's Right to Accept any Bid and to Reject any or all Bids

The Employer reserves the right to accept or reject any bid or to cancel the bidding process and reject all bids, at any time prior to the award of the contract, without assigning any reasons whatsoever and without thereby incurring any liability to the affected Bidder or Bidders.

24. Notification of Award and Signing of Agreement

24.1 The Bidder whose bid is accepted and all other participating bidders shall be notified of the award by the Employer.

24.2 The notification (hereafter called the "Letter of Acceptance") to the successful Bidder shall state the sum that the Employer shall pay the Bidder in consideration of the execution, completion, and maintenance of the works as described by the contract within 7 days of receipt of the Letter of Acceptance, the successful Bidder shall deliver the

Performance Security pursuant Clause 25 and sign the Agreement.

24.3 Inability of the Bidder to make an Agreement within the above stated period shall result in cancellation of the Contract Award and forfeiture of the Bidder's Bid Security, upon which the Contract shall then be awarded to the next successive successful Bidder.

25. Performance Security

The successful Bidder shall deliver to the Employer a Performance Security in cash or Bank Guarantee acceptable to the Employer equivalent to 5% of the bid amount..

26. Additional Securities

The Bidder may be required to provide additional Performance Security if the Employer determines that the amount quoted by the Bidder in the Bill of Quantities, is lower than 15% of estimated rate. In such case, the Employer shall instruct the Bidder to provide additional security for signing of the Contract Agreement, where additional security amounts to half of the difference amount between quoted amount & amount that is 15% less the estimated rate. Bidder's failure to do provide additional security shall result in forfeiture of the Bid Security and award of the Contract to the next lowest evaluated Bidder.

27. Corrupt or Fraudulent Practices

The Employer shall reject a bid for award if it determines that the Bidder recommended for award of contract has engaged in corrupt or fraudulent practices in competing for the contract in question.

28. Conduct of Bidders

28.1 The Bidder shall be responsible to fulfill his obligations as per the requirement of the Contract Agreement, Bidding documents, GoN's Procurement Act and Regulations.

28.2 The Bidder shall not carry out or cause to carryout the following acts with an intention to influence the implementation of the procurement process or the procurement agreement :

a) give or propose improper inducement directly or indirectly,

b) distortion or misrepresentation of facts

c) engaging or being involved in corrupt or fraudulent practice

d) interference in participation of other prospective bidders.

e) coercion or threatening directly or indirectly to cause harm to the person or the property of any person to be involved in the procurement proceedings,

f) collusive practice among bidders before or after submission of bids for distribution of works among bidders or fixing artificial/uncompetitive bid price with an intention to deprive the Employer the benefit of open competitive bid price.

g) contacting the Employer with an intention to influence the Employer with regards to the bid or interference of any kind in examination and evaluation of the bids during the period after opening of bids up to the notification of award of contract

29. Blacklisting Bidder

29.1 Without prejudice to any other right of the Employer under this Contract, GoN, Public Procurement Monitoring Office may blacklist a bidder for his conduct up to three years on the following grounds and seriousness of the act committed by the bidder:

a) if it is proved that the bidder committed acts pursuant to the

Sub - Clause 28.2,

b) if the bidder fails to sign an agreement pursuant to Sub - Clause 24.2,

c) if it is proved later that the bidder/contractor had committed substantial defect in implementation of the contract or had not substantially fulfilled his obligations under the contract or the completed work is not of the specified quality as per the contract ,

d) if convicted by a court of law in a criminal offence which disqualifies the bidder from participating in the contract.

e) if it is proved that the contract agreement signed by the bidder was based on false or misrepresentation of bidder's qualification information,

f)other acts mentioned in the Bidding Data

29.2 A firm declared blacklisted and ineligible by the GON shall be ineligible to bid for a contract during the period of time determined by the PPMO.

Section III. Sample Forms of Bid, Eligibility Information, Letter of Acceptance and Agreement

Bid

We have examined the documents listed in Instruction to Bidders, Clause 4 and offer to execute the works in conformity with the contract for the sum of ……..... ……. (in words) …….. (in figures) or such other sum as may be ascertained under the contract.

This bid shall remain binding until _____*[date]*. This bid and your written acceptance of it shall constitute a binding contract between us.

We understand that the Employer is not bound to accept the lowest or any offer received for the Works.

Signature _____ Date: _____

Name: _____

Authorized to sign on behalf of (organization name): _____

Designation: _____

Office Stamp of the Organization: _____

Eligibility Information

1. Eligibility Requirements:

All Bidders shall submit following documents as pre- requisites for eligibility:

a. Constitution or legal status of Bidder: [attach notarized copy]
b. Up to date Registration Certificate: [attach notarized copy]
c. Pan Registration Certificate: [attach notarized copy]
d. Up to date Tax Returns/ Clearance: [attach notarized copy]
e. Power of Attorney: [attach notarized copy]
f. Place of registration: [insert]
g. A written declaration made by the Bidder stating that the Bidder is not ineligible to participate in the bid; has no conflict of interest in the bid procu8rement proceedings and has not been punished for the profession or business related offence.
h. Principal Place of business: [insert]

Letter of Acceptance

[Letterhead of the Employer]

Date: _____

To: *[name and address of the contractor]*

This is to notify you that your Quotation (Bid) dated *[date]* for execution of the *[name of the Contract and identification number, as given in the Invitation for Quotation]* for the Contract Price of *[insert the amount in Nepalese Rupees in numbers and words]* as corrected and modified[1] in accordance with the Instructions to *Bidder*s is hereby accepted by our Agency.

You are hereby instructed to contact our office *[Office address]* to sign the formal agreement on *[date]* at *[time]. As per the Instructions to Bidders you are also required to submit Performance Security, as specified in the* Section VIII Sample Forms of Securities, *, consisting of a Bank Guarantee in an approved format or cash deposit voucher in favour of the Employer in the Employer's Bank account [enter account details].*

The Employer shall forfeit the bid security, in case you fail to furnish the Performance Security and to sign the contract.

Please convey our unconditional acceptance by signing on the original of this letter and submit the required Performance Security at the time of formal agreement.

Authorized Signature: _____

Name: _____

Designation: _____

[1] *Delete "corrected and" or "and modified" if not applicable. See Notes on Standard Form of Agreement, next page.*

Agreement

This Agreement, made the *[day]* day of *[month]*, *[year]* between *[name and address of Employer]* (hereinafter called "the Employer") and *[name and address of contractor]* (hereinafter called "the contractor") of the other part.

Whereas the Employer is desirous that the contractor execute *[name and identification number of contract]* (hereinafter called "the Works") and the Employer has accepted the bid for _____*[insert the amount in Nepalese Rupees in numbers and words]* by the contractor for the execution and completion of such Works and the remedying of any defects therein.

Now this Agreement witnesseth as follows:

1. In this Agreement, words and expressions shall have the same meanings as are respectively assigned to them in the Conditions of Contract hereinafter referred to, and they shall be deemed to form and be read and construed as part of this Agreement.

2. In consideration of the payments to be made by the Employer to the contractor as hereinafter mentioned, the contractor hereby covenants with the Employer to execute and complete the Works and remedy any defects therein in conformity in all respects with the provisions of the Contract.

3. The Employer hereby covenants to pay the contractor in consideration of the execution and completion of the Works and the remedying of defects wherein, the Contract Price or such other sum as may become payable under the provisions of the Contract at the times and in the manner prescribed by the Contract.

In Witness whereof the parties thereto have caused this Agreement to be executed the day and year first before written.

The Common Seal of _____
was hereunto affixed in the presence of: _____

Signed, Sealed, and Delivered by the said _____
in the presence of: _____

Binding Signature of Employer _____

Binding Signature of Contractor _____

Section IV. General Conditions of Contract (GCC)

1. General Provisions

1.1 Definitions

In the Contract as defined below, the words and expressions defined shall have the following meanings assigned to them, except where the context requires otherwise:

The Contract

1.1.1 "**Contract**" means the Agreement signed between the Employer and the contractor and the other documents listed in the Special Conditions of Contract (SCC).

1.1.2 "**Specification**" means the document as listed in the SCC, and any variation to such document.

1.1.3 "**Drawings**" means the Employer's drawings of the Works as listed in the SCC, and any variation to such drawings.

1.1.4 "**Bill of Quantities**" means the priced and completed bill of quantities forming part of the Tender.

1.1.5 "**Bid or Quotation**" means the contractor's priced offer to the Employer for the execution and completion of the Works and the remedying of any defects therein in accordance with the provisions of the Contract, as accepted by the Letter of Acceptance.

1.1.6 "**Letter of Acceptance**" means the formal acceptance by the Employer of the **bid** or Tender.

Persons

1.1.7 "**Employer**" means the person named in the Agreement and the legal successors in title to this person, but not (except with the consent of the contractor) any assignee.

1.1.8 "**Contractor**" means the person named in the Agreement and the legal successors in title to this person, but not (except with the consent of the Employer) any assignee.

1.1.9 "**Party**" means either Employer or the contractor.

Date, Times and Periods

1.1.10 "**Commencement Date**" means the date stated in the SCC after the date the Agreement comes into effect or any other date agreed between the Parties.

1.1.11 "**Day**" means a calendar day.

1.1.12 "**Time for Completion**" means the time for completing the Works as stated in the SCC (or as extended under Sub-Clause 6.3), calculated from the Commencement Date.

Money and Payments

1.1.13 "**Cost**" means all expenditure properly incurred (or to be incurred) by the contractor, whether on or off the Site, including overheads and similar charges, but does not include profit.

1.1.14 "**Contract Price**" means the sum stated in the Letter of Acceptance as payable to the contractor and adjusted

with any Variation Orders and Other Adjustments upon completion of the works and the remedying of any defects therein in accordance with the provisions of the Contract.

1.1.15 "**Retention Money**" means the aggregate of all monies retained by the Employer pursuant to Sub-Clause 10.3

Other Definitions

1.1.16 "**Contractor's Equipment**" means all apparatus, machinery, vehicles, facilities and other things required for the execution of the Works but does not include Materials or Plant.

1.1.17 "**Country**" means Nepal.

1.1.18 "**Employer's Liabilities**" means those matters listed in Sub-Clause 5.1.

1.1.19 "**Materials**" means things of all kinds (other than Plant) intended to form or forming part of the permanent work.

1.1.20 "**Plant**" means the machinery and apparatus intended to form or forming part of the Permanent Works.

1.1.21 "**Site**" means the places provided by the Employer where the Works are to be executed, and any other places specified in the Contract as forming part of the Site.

1.1.22 "**Variation**" means any change which is a result of unforeseen circumstances that arise as a result of instruction by the Employer/ Engineer under Sub-Clause 9.1.

1.1.23 "**Works**" means all the work and design (if any) to be performed by the contractor including temporary work and any Variation.

1.1.24 "**Permanent Works**" means the permanent works to be executed (Including Plant) in accordance with the Contract.

1.1.25 "**Temporary Works**" means all temporary works of every kind (other than contractor's Equipment) required in or about the execution and completion of the Works and the remedying of any defects therein.

1.1.26 "**Adjudication**" means the procedure to be adopted by the contractor and the Employer in solving the dispute if it is not solved amicably pursuant to Sub-Clause 13.1.

1.2 Interpretation

Words importing persons or parties shall include firms and organisations. Words importing singular or one gender shall include plural or the other gender where the context requires.

1.3 Priority of Documents

The documents forming the Contract shall to be taken as mutually explanatory of one another. If an ambiguity or discrepancy is found in the documents, the Employer shall issue any necessary instructions to the contractor, and the priority of the documents shall be in accordance with the order as listed in the SCC.

1.4 Law

The law of the Contract is stated in the SCC.

1.5 Communications

Where provision is made for the giving or issue of any notice, instruction, or other communication by any person, unless otherwise specified such communication shall be written in the language stated in the SCC as shall not be unreasonably withheld or delayed.

If a notice given pursuant to Sub Clause 1.5 fails to be delivered due to failure to trace the address of the party then the notice shall be published as public notice in a National daily newspaper and when the notice is so published then the notice shall be considered to be delivered to the concerned party.

1.6 Statutory Obligations

The contractor shall comply with the laws of the countries where activities are performed. The contractor shall give all notices and pay all fees and other charges in respect of the Works.

2. The Employer

2.1 Provision of Site

The Employer shall provide the Site and right of access thereto at the times stated in the SCC.

2.2 Permits and Licenses

The Employer shall, if requested by the contractor, assist him in applying for permits, licences or approvals which are required for the Works.

2.3 Employer's Instructions

The contractor shall comply with all instructions given by the Employer in respect of the Works including the suspension of all or part of the Works.

2.4 Approvals

No approval or consent or absence of comment by the Employer or the Employer's representative shall affect the contractor's obligations.

3. Employer's Representatives

3.1 Authorised Person

One of the Employer's personnel shall have authority to act for him. This authorised person shall be as stated in the SCC, or as otherwise notified by the Employer to the contractor.

3.2 Employer's Representative

The Employer may also appoint a firm or individual to carry out certain duties. The appointee may be named in the SCC, or notified by the Employer to the contractor from time to time. The Employer shall notify the contractor of the delegated duties and authority of this Employer's representative.

4. The Contractor

4.1 General Obligations

The contractor shall carry out the Works properly and in accordance with the Contract. The contractor shall provide all supervision, labour, Materials, Plant and contractor's Equipment which may be required. All Materials and Plant on Site shall be deemed to be the property of the Employer.
During continuance of the of the contract, the contractor and his sub-contractors shall abide at all times by all labour laws, including child labour related enactments, and rules made there under.

A child who has not attained the age of fourteen years shall not be employed in any work as a labourer.

4.2 Contractor's Representative

The contractor shall submit to the Employer for consent the name and particulars of the person authorised to receive instructions on behalf of the contractor.

4.3 Subcontracting

The contractor shall not subcontract the whole of the Works. The contractor shall not subcontract any part of the Works without the consent of the Employer.

4.4 Performance Security

As stated in the SCC, the Contractor shall deliver to the Employer no later than the date specified in the Letter of Acceptance.

5. Employer's Liabilities

5.1 Employer's Liabilities

In this Contract, Employer's Liabilities mean:

a. war, hostilities (whether war be declared or not), invasion, act of foreign enemies, within the Country,

b. rebellion, terrorism, revolution, insurrection, military or usurped power, or civil war, within the Country,

c. riot, commotion or disorder by persons other than the contractor's personnel and other employees, affecting the Site and/or the Works.

d. use or occupation by the Employer of any part of the Works, except as may be specified in the Contract,

e. design of any part of the Works by the Employer's personnel or by others for whom the Employer is responsible,

f. any operation of the forces of nature affecting the Site and/or the Works, which was unforeseeable or against which an experienced contractor could not reasonably have been expected to take precautions

g. a suspension under Sub-Clause 2.3 unless it is attributable to the contractor's failure,

h. any failure of the Employer,

i. physical obstructions or physical conditions, other than climatic conditions, encountered on the Site during the performance of the Works, which obstructions or conditions were not reasonably foreseeable by an experienced contractor and which the contractor immediately notified to the Employer,

j. any delay or disruption caused by any Variation,

k. any change to the law of the Contract after the date of the contractor's offer as stated in the Agreement,

l. losses arising out of the Employer's right to have the permanent work executed on, over, under, in or through any land, and to occupy this land for the permanent work, and

m. damage which is an unavoidable result of the contractor's obligations to execute the Works and to remedy any defects.

6. Time for Completion

6.1 Execution of the Works

The contractor shall commence the Works on the Commencement Date and shall proceed expeditiously and without delay and shall complete the Works within the Time for Completion.

6.2 Programme

The contractor shall submit to the Employer a programme for the Works within the time stated in the SCC

6.3 Extension of Time

The contractor shall be entitled to an extension to the Time for Completion if he is or shall be delayed by any of the Employer's Liabilities.
The contractor shall submit an application to the Employer for extension of time, stating the causes for delay, 7 days before the expiry of the Contract completion date.
On receipt of an application from the contractor, the Employer shall consider all supporting details provided by the contractor and shall extend the Time for Completion as appropriate.

6.4 Liquidated Damages for Delay

If the contractor fails to complete the Works within the Time for Completion, the contractor's liability to the Employer for such failure shall be to pay the amount stated in the SCC for each day for which he fails to complete the Works.

7. Taking-Over

7.1 Completion

The contractor may notify the Employer when he considers that the Works are complete.

7.2 Taking-Over Notice

The Employer shall notify the contractor when he considers that the contractor has completed the Works stating the date accordingly. Alternatively, the Employer may notify the contractor that the Works, although not fully complete, are ready for taking over, stating the date accordingly.

The Employer shall take over the Works upon the issue of this notice. The contractor shall promptly complete any outstanding work and, subject to Clause 8, clear the Site.

8. Remedying Defects

8.1 Remedying Defects

The Employer may at any time prior to the expiry of the period stated in the SCC, notify the contractor of any defects or outstanding work. The contractor shall remedy at no cost to the Employer any defects due to the contractor's design, materials, plant or workmanship not being in accordance with the Contract.

Failure to remedy any defects or complete outstanding work within a reasonable time of the Employer's notice shall entitle the Employer to carry out all necessary work at the contractor's cost.

8.2 Uncovering and Testing

The Employer may give instruction as to the uncovering and/or testing of any work. Unless as a result of any uncovering and/or testing it is established that the contractor's design, materials, plant or workmanship are not in accordance with the Contract, the Contractor shall be paid for such uncovering and/or testing as a Variation in accordance with Sub-Clause 9.2.

9. Variations and Claims

9.1 Right to Vary

The Employer may instruct Variations.

9.2 Valuation of Variations

Variations shall be valued as follows:

a. where appropriate, at rates in the Contract, or

b. in the absence of appropriate rates, the rates in the Contract shall be used as the basis for valuation or

c. at appropriate new rates, as may be agreed or which the Employer considers appropriate.

9.4 Right to Claim

If the contractor incurs cost as a result of any of the Employer's Liabilities, the contractor shall be entitled to the amount of such cost. If as a result of any of the Employer's Liabilities, it is necessary to change the Works, this shall be dealt with as a Variation.

9.5 Variation and Claim Procedure

The contractor shall submit the Employer an itemised make-up of the value of Variations and claims within 7 days of the instruction or of the event giving rise to the claim. The Employer shall check and if possible agree the value. In the absence of agreement, the Employer shall determine the value.

10. Contract Price and Payment

10.1 Valuation of the Works

The Contract Bill of Quantities and the approved Variation quantities shall be used to calculate the valuation of the works completed .The contractor shall be paid for the quantity of work done at the rate in the Bill of Quantities or rate agreed pursuant to clause 9.2 for varied works.

10.2 Payments Certificates

The Contractor shall submit to the Employer monthly statements of the estimated value of the works completed less the cumulative amount certified previously. The Employer shall check the Contractor's monthly statement and certify the amount to be paid to the Contractor

10.3 Payments

The Employer shall pay to the contractor the amount certified less retention at the rate stated in the SCC within 30 days of the date of each certificate.

10.4 Payment of Retention

One half of the retention shall be repaid by the Employer to the contractor within 30 days upon expiry of Defects Liability Period and the Employer has certified that the notified defects have been corrected.

The remainder of the retention shall be paid by the Employer to the contractor within 7 days after submission of evidence document from the concerned Internal Revenue Office that the contractor has submitted his Income Returns

10.5 Advance Payment

a The Employer may make advance payment to the contractor of the amounts stated in the SCC within 30 days, against provision by the contractor of an Unconditional Bank Guarantee in a form and by a bank acceptable to the Employer in amounts and currencies equal to the advance payment. The Guarantee shall remain effective until the

advance payment has been repaid, but the amount of the Guarantee shall be progressively reduced by the amounts repaid by the contractor. Interest will not be charged on the advance payment.

b. The advance payment shall be repaid by deducting proportionate amounts from payments otherwise due to the contractor, following the schedule of completed percentages of the Works as indicated in SCC

10.6 Local Taxation & Value Added Tax

a. The prices quoted by the Contractor shall include all taxes that may be levied in accordance to the laws and regulations in being in Nepal.

b. The Contract is not exempted from value added tax. The Contractor shall pay VAT in the concerned VAT office within time frame specified in VAT regulation.

11. Termination of Contract

11.1 Default by Contractor

If the contractor abandons the Works, refuses or fails to comply with a valid instruction of the Employer or fails to proceed expeditiously and without delay or is, despite a written complaint, in breach of the Contract, the Employer may give notice referring to this Sub-Clause and stating the default.

If the contractor has not taken all practicable steps to remedy the default within 15 days after the contractor's receipt of the Employer's notice, the Employer may, by a second notice given within a further 22 days, terminate the Contract. The Contractor shall then demobilize from the Site leaving behind Materials and Plant and any contractor's Equipment which the Employer instructs in the second notice to be used until the completion of the Works.

11.2 Default by Employer

If the Employer fails to pay in accordance with the Contract, or is, despite a written complaint, in breach of the Contract, the contractor may give notice referring to this Sub-Clause and stating the default. If the default is not remedied within 7 days after the Employer's receipt of this notice, the contractor may suspend the execution of all or parts of the Works.

If the default is not remedied within 30 days after the Employer's receipt of the contractor's notice, the contractor may, by a second notice given within a further 22 days, terminate the Contract. The contractor shall then demobilise from the Site.

11.3 Insolvency

If a Party is declared insolvent under any applicable law, the other Party may by notice terminate the Contract immediately. The contractor shall then demobilise from the Site leaving behind, in the case of the contractor's insolvency, any contractor's Equipment which the Employer instructs in the notice is to be used until the completion of the Works.

11.4 Termination by Convenience

Notwithstanding the above, the Employer shall be entitled to terminate the Contract in public interest, at any time at the Employer's convenience, by giving notice of such termination to the contractor.

11.5 Payment upon

After termination, the contractor shall be entitled to payment of the

Termination

unpaid balance of the value of the Works executed and of the Materials and Plant reasonably delivered to the Site, adjusted by the following:

a. any sums to which the contractor is entitled under Sub- Clause 9.4,

b. any sums to which the Employer is entitled,

c. if the Employer has terminated under Sub-Clause 11.1 or 11.3, the Employer shall be entitled to a sum equivalent to 20% of the value of those parts of the Works not executed at the date of the termination,

d. if the contractor has terminated under Sub-Clause 11.2 or 11.4, the contractor shall be entitled to the Cost of his suspension and demobilisation together with a sum equivalent to 10% of the value of those parts of the Works not executed at the date of termination

The net balance due shall be paid or repaid within 30 days of the notice of termination.

12. Risk and Responsibility

12.1 Contractor's Care of the Works

The contractor shall take full responsibility for the care of the Works from the Commencement Date until the date of the Employer's notice under Sub-Clause 7.2. Responsibility shall then pass to the Employer. If any loss or damage occurs to the Works during the above period, the contractor shall rectify such loss or damage so that the Works conform to the Contract.

12.2 Force Majeure

If a Party is or shall be prevented from performing any of its obligations by Force Majeure, the Party affected shall notify the other Party immediately. If necessary, the contractor shall suspend the execution of the Works and, to the extent agreed with the Employer, demobilise the contractor's Equipment.

If the event continues for a period of 90 days, either Party may then give notice of termination which shall take effect 30 days after the giving of the notice.

After termination, the contractor shall be entitled to payment of the unpaid balance of the value of the Works executed and of the Materials and Plant reasonably delivered to the Site, adjusted by the following:

a. any sums to which the contractor is entitled under Sub-Clause 9.4,

b. the Cost of his suspension and demobilisation,

c. any sums to which the Employer is entitled.

The net balance due shall be paid or repaid within 30 days of the notice of termination.

13. Resolution of Disputes

13.1 Adjudication

If any dispute shall arises out of or in connection with the

Contract, including any valuation or other decision of the Employer, then the parties shall attempt to settle such dispute amicably. However if the dispute is not settled amicably then the dispute shall be referred to the Adjudicator. The adjudicator shall be any person agreed by the Parties. In case of disagreement the Employer shall request Nepal Council of Arbitration (NEPCA) for appointment of the Adjudicator.

13.2 Amicable Settlement

If either Party is dissatisfied with the decision of the adjudicator attempt shall be made to resolve the dispute amicably.

14.Conduct of Bidders

14.1 The Bidder shall be responsible to fulfil his obligations as per the requirement of the Contract Agreement, Bidding documents, GoN's Procurement Act and Regulations.

14.2 The Bidder shall not carry out or cause to carryout the following acts with an intention to influence the implementation of the procurement process or the procurement agreement :

h) give or propose improper inducement directly or indirectly,

i) distortion or misrepresentation of facts

j) engaging or being involved in corrupt or fraudulent practice

k) interference in participation of other prospective bidders.

l) coercion or threatening directly or indirectly to cause harm to the person or the property of any person to be involved in the procurement proceedings,

m) collusive practice among bidders before or after submission of bids for distribution of works among bidders or fixing artificial/uncompetitive bid price with an intention to deprive the Employer the benefit of open competitive bid price..

n) contacting the Employer wit an intention to influence the Employer with regards to the bid or interference of any kind in examination and evaluation of the bids during the period after opening of bids up to the notification of award of contract

15. Blacklisting Bidder

15.1 Without prejudice to any other right of the Employer under this Contract, GoN, Public Procurement Monitoring Office may blacklist a bidder for his conduct up to three years on the following grounds and seriousness of the act committed by the bidder:

g) if it is proved that the bidder committed acts pursuant to the Sub - Clause 14.2,

h) if the bidder fails to sign an agreement pursuant to Instruction to Bidders Sub - Clause 24.2,

i) if it is proved later that the bidder/contractor had committed substantial defect in implementation of the contract or had not substantially fulfilled his obligations under the contract or the completed work is not of the specified quality as per the contract ,

j) if convicted by a court of law in a criminal offence which disqualifies the bidder from participating in the contract.

k) if it is proved that the contract agreement signed by the

bidder was based on false or misrepresentation of bidder's qualification information,

l) other acts mentioned in the Bidding Data

15.2 A firm declared blacklisted and ineligible by the GON shall be ineligible to bid for a contract during the period of time determined by the PPMO.

Section V. Special Conditions of Contract (SCC)

This SCC forms part of the Agreement

Item	Clause	Data
Documents forming the Contract listed in the order of priority **Document** a. The Agreement b. Special Conditions of Contract c. General Conditions of Contract d. The Technical Specifications e. The Drawings f. The Bill of Quantities g. ……..(if any) h. ……(if any)	1.1.1	Document Identification
Time for Completion	1.1.12	**90** days after signing the contract
Law of Contract	1.4	Applicable Law of Nepal
Language	1.5	English or [in Nepali version]
Provision of Site	2.1	On the commencement date*
Authorized person	3.1	The Centre Chief NEA, Baglung Distribution Centre
Name and address of Employer's representative (if known)	3.2	N/A
Performance security (if any): Amount: Form:	 4.4 4.4	…5…. % of the contract price Security, Additional Security as mentioned in ITB 26 format Attached in section IX
Time for the submission of programme	6.2	Within 7 days* of the commencement date
Liquidated Damages for Delay	6.4	0.05% of the Contract Price per day up to a maximum of 10%* of sum stated in the Agreement
Period for notifying defects	8.1	365 days* calculated from the date stated in the notice under Sub-Clause 8.1.

* Employer to specify as appropriate

Percentage of retention	10.3	5% of each payment made to the Contractor
Advance Payment	10.5(a)	10 % of the contract price
Deduction of Advance Payment	10.5(b)	30% of each payment certificate

Section VI. Technical Specification

1. **TECHNICAL SPECIFICATION OF WORKS**

A. Erection of Steel Tubular pole:

i. Transportation from office store to construction place
ii. A minimum of 1.5 m planting depth for 8 meter Poles and 9 meter Poles and 1.8 m depth hole for 10 meter and 11 meter poles shall be dug for erection of the pole. After erection, proper ramming shall be done around the pole.
iii. The pole should be straight (perpendicular to the ground.)

B. Erection of stay set and wire:

i. Stay plate shall be at the depth of 6 feet.
ii. Stay insulator shall be put in stay wire at least 12 feet above ground level.
iii. Stay wire shall be in tension.

C. Stringing of 0.03 / 0.05 Sq.inch ACSR conductor:

i. The conductors shall be in tension after stringing.
ii. Stringing of conductor includes fittings of channel, Bracket, pin insulator, disc insulator/ or D-iron shackle, dead end points, jumpering shall be used as required.
iii. Double disk insulator has to be installed in certain points of Network.
iv. In all dead-end points, jumpering shall be connected in proper way.
v. The size of conductors to string in particular poles shall be as directed by NEA.

D. Final completion report should be submitted with the Site Incharge's verification.

E. Dismantling of existing lines and shifting of lines:

In sites where old wooden pole is replaced with steel tubular pole after erection of steel tubular poles, all conductor and other line materials shall be shifted from old wooden poles to new steel poles, and the line should be charged to be in perfect running conditions. Extra materials after dismantling should be dismantled with proper care and the materials should be submitted to the store of Baglung Distribution Centre.

F. Dismantling/Installation of Unit Tower Set and Transformer

i. Unit tower set should be straight (perpendicular to ground).
ii. Metering unit(if specified in contract) should be properly connected and shall be as directed by NEA.
iii. All hardware connections should be tight enough.
iv. Grounding should be effective and shall be provided in both high voltage and low voltage sections.

2. Consultation should be carried out with engineer or site in-charge before any works and works should be completed as per direction of engineer or site in-charge.

Section VII. Drawings

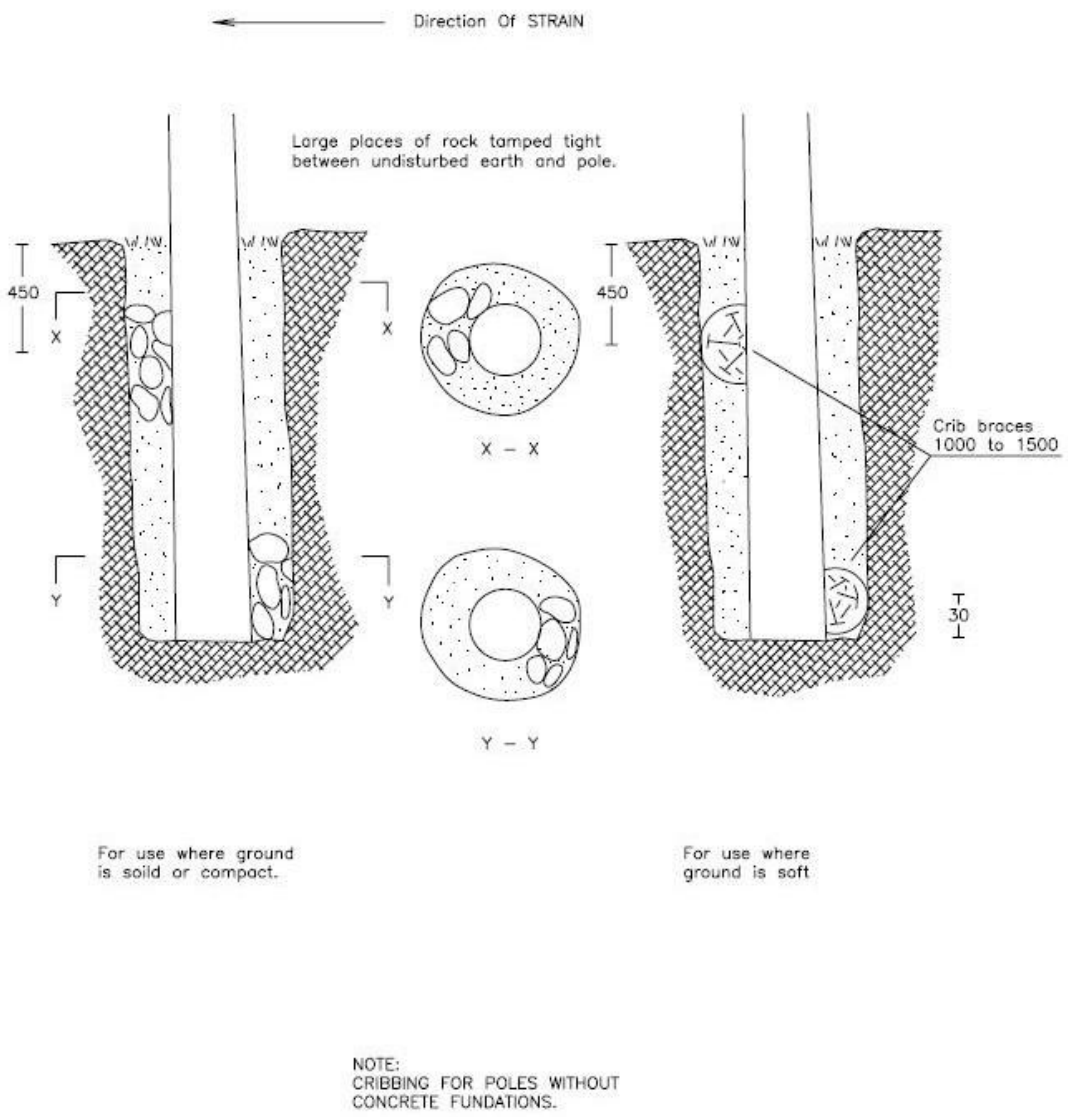

NOTE:
CRIBBING FOR POLES WITHOUT CONCRETE FUNDATIONS.

Drawing **CSG-POLE-02**	**Pole Burial**	NEPAL ELECTRICITY AUTHORITY **Technical Services / Commercial Department** Distribution and Consumer Services

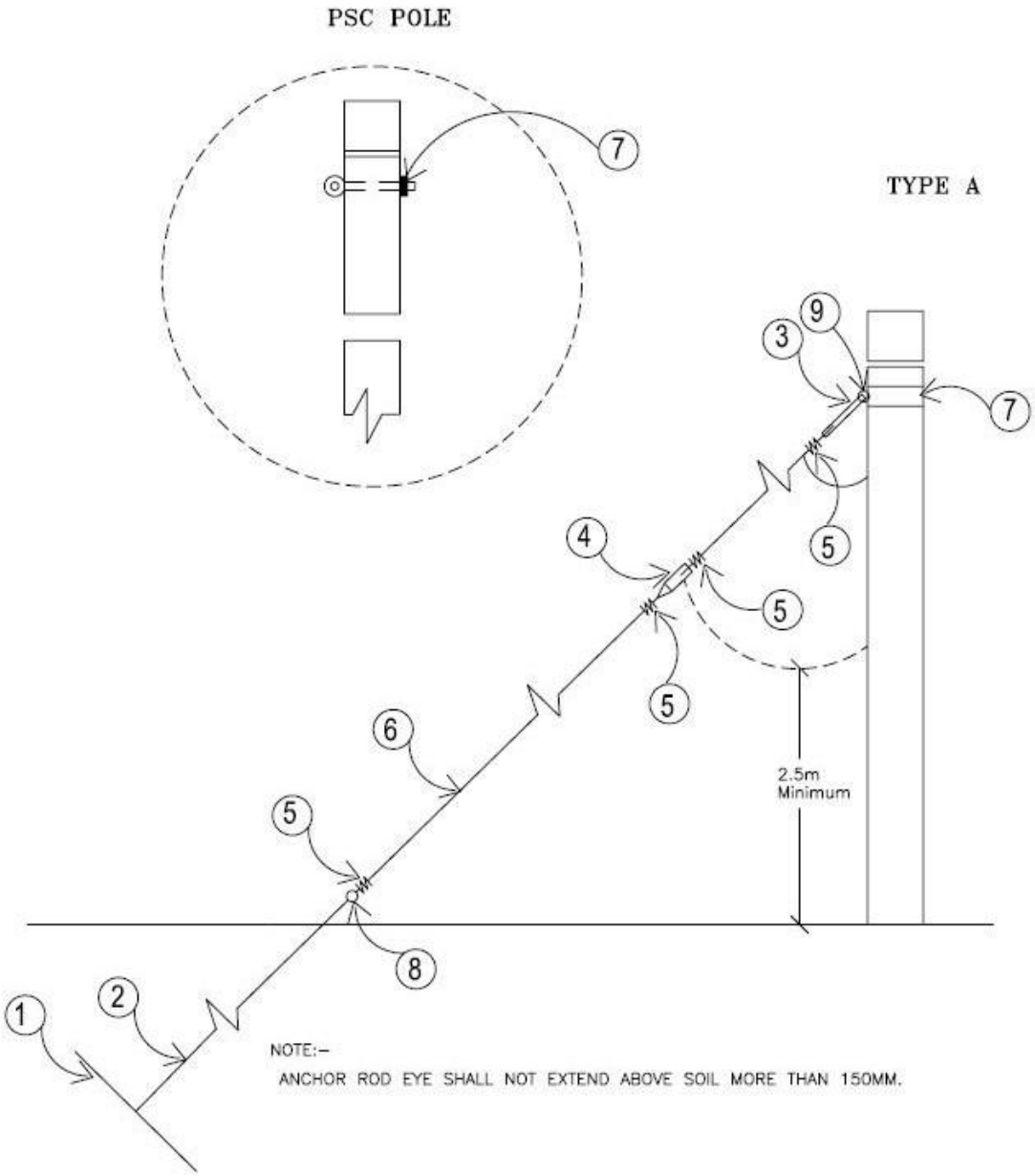

Drawing	Stays and Anchors	NEPAL ELECTRICITY AUTHORITY
CSG-STAY-02	**HT and LT Stay - Type A**	**Technical Services / Commercial Department**
		Distribution and Consumer Services

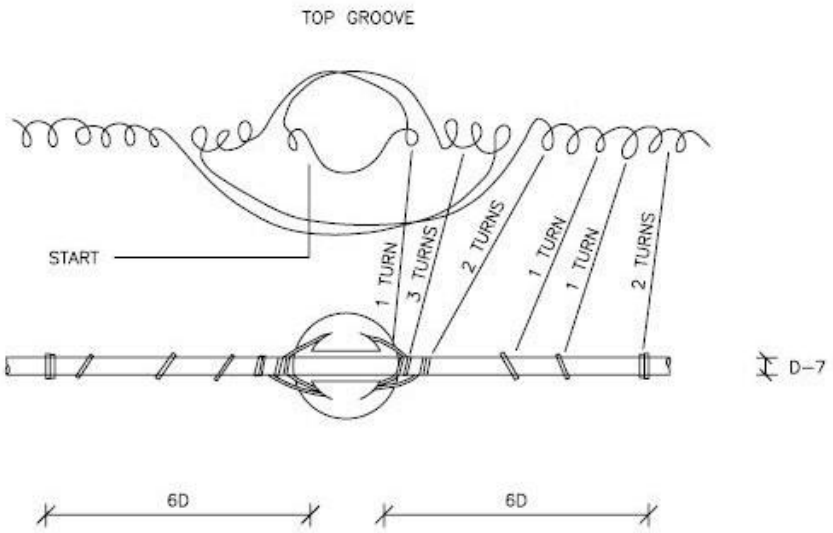

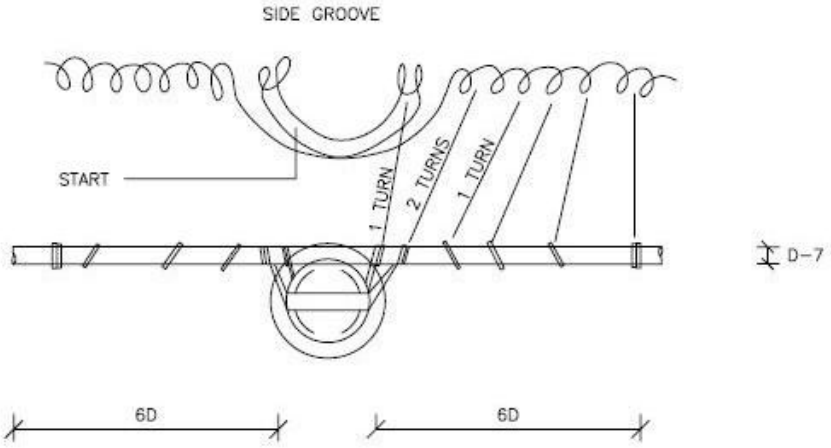

NOTE
1. HAND TIES TO BE USED ONLY WHEN PREFORMED TIES NOT AVAILABLE.
2. CLINCH LAST TWO TURNS TIGHT WITH PLIERS.
3. SOFT DRAWN – TIE WIRE, TO BE USED FOR ALL TIES.

Drawing **CSG-TIES-02**	**Insulator Ties**	NEPAL ELECTRICITY AUTHORITY **Technical Services / Commercial Department** Distribution and Consumer Services

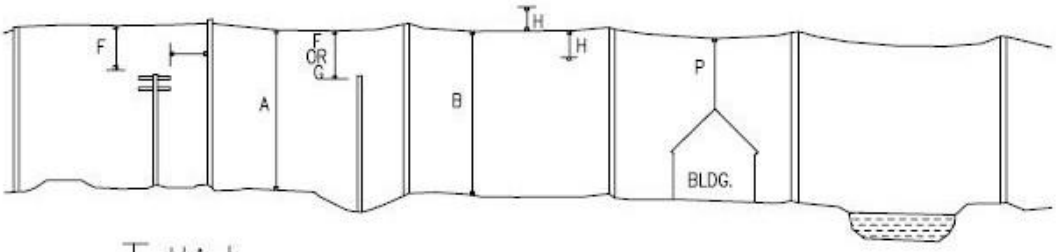

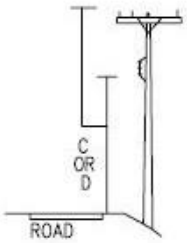

POLES ADJACENT TO ROADS

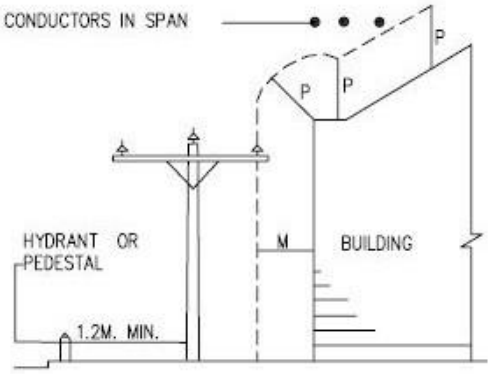

MINIMMUM CLEARANCE FROM BUILDINGS

	CROSSING OVER	VOLTAGE OF CIRCUIT CROSSING	METER
A	ROAD, STREET, HIGHWAY OR LIMITED ACCESS HIGHWAY	230/400 V – 11 KV*	5.80
		11 KV** – 33 KV	6.10
B	AREAS ACCESSIBLE TO PEDESTRIANS ONLY	230/400 V – 11 KV*	4.60
		11 KV** – 33 KV	5.20
	LINE ALONG SIDE OF		
C	MAIN HIGHWAYS, STREETS OR ALLEYS	230/400 V – 11 KV*	5.50
		11 KV** – 33 KV	5.80
D	RURAL ROADS NO VEHICLE CROSSING UNDER	230/400 V – 11 KV*	4.60
		11 KV** – 33 KV	5.20

* Exclusive ** Inclusive

LOCATIONB	VOLTAGE	CLEARANCE (METER)
Min. Horizontal Clearance from Buildings, M	230/400 V – 11 KV**	1.25
	11 KV* – 33 KV	2.00
Min. Vertical Clearance from tallest pt. of Garage, Hut or Wall, P	230/400 V	3.00

CLEARANCE M ALSO SPECIFIED HORIZONTAL CLEARANCE FROM BALCONIES.

	CONDUCTORS AT HIGHER LEVEL / CONDUCTORS AT LOWER LEVEL	SERVICE DROP 0 – 650 V	OPEN SUPPLY WIRES 0 – 650V	651 – 11000 V	33000 V	STAYS AND SUPPLY CABLES ON GROUNDED MESSENGER
F	COMMUNICATION WIRES	0.60 M.				
	COMMUNICATION CABLES AND MESSENGER	0.6 M. OVER 1.2 M. UNDER	1.38	2.15	—	0.60
G	SUPPLY CABLES ON EFFECTIVE GROUNDED MESSENGER	0.6 M. OVER 1.2 M. UNDER	0.60	0.60	—	0.60
H	OPEN SUPPLY 0 – 650 V.	—	1.30	1.80	2.70	0.60
	WIRES 651 – 11,000 V.	—	—	1.20	—	1.20
	GUYS SERVICE DROPS 0 – 650 V.	0.60	0.60	1.20	—	—

Drawing	Conductor Clearance	NEPAL ELECTRICITY AUTHORITY
CSG-CLR-01		**Technical Services / Commercial Department**
		Distribution and Consumer Services

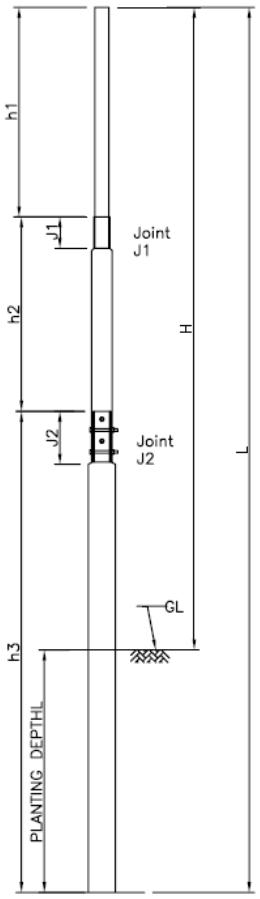

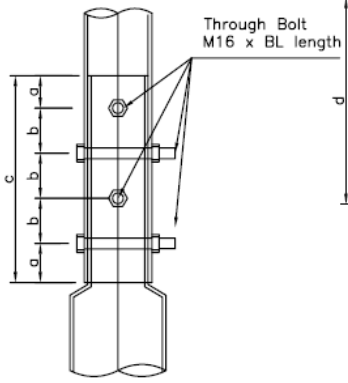

BOLTED JOINT
J2 DETAIL

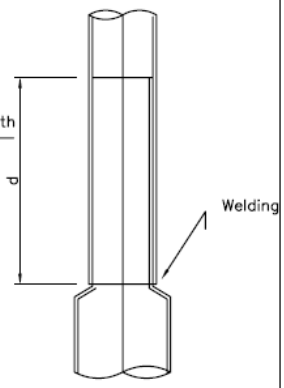

WELDED JOINT
J1 DETAIL

Pole type>>			8 M 410-SP-13
L		m	8
H		m	6.5
Top segment	OD	mm	88.9
	Thickness	mm	3.25
	h1	m	1.75
Middle segment	OD	mm	114.3
	Thickness	mm	3.65
	h2	m	1.75
Bottom Segment	OD	mm	139.7
	Thickness	mm	4.5
	h3	m	4.5
Joint J1	WELDED JOINT		
	d	mm	230
Joint J2	a	mm	45
	b	mm	70
	c	mm	300
	BL	mm	160
PLANTING DEPTH		m	1.5

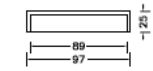

CAP
197 ODx89 IDx25x4mm

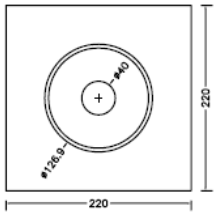

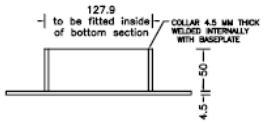

BASE PLATE
220X220X4.5MM

Note:-

1. All dimensions are in mm otherwise mentioned.
2. Drawings are not to scale.
3. Standards:-
   IS2713-1980- (Part I to II) Or Equivalent Specification (Tubular Poles for Overhead Power Lines)
   IS 1161-1998 Or Equivalent (Steel Tubes for Structural Purposes)
   IS 2062-1992 Or Equivalent (Steel for General Structural Purposes)
   IS 2629-1985 Or Equivalent (Standard for Hot Dip Galvanization)
4. Poles shall be hot dip galvanized inside as well as outside surface over the length specified in the specification. The remaining exposed outside portion shall be painted with red oxide painting in accordance with specification.

8 m Steel Tubular Pole

NEPAL ELECTRICITY AUTHORITY
Baglung Distribution Center
(Conceptual Drawing)

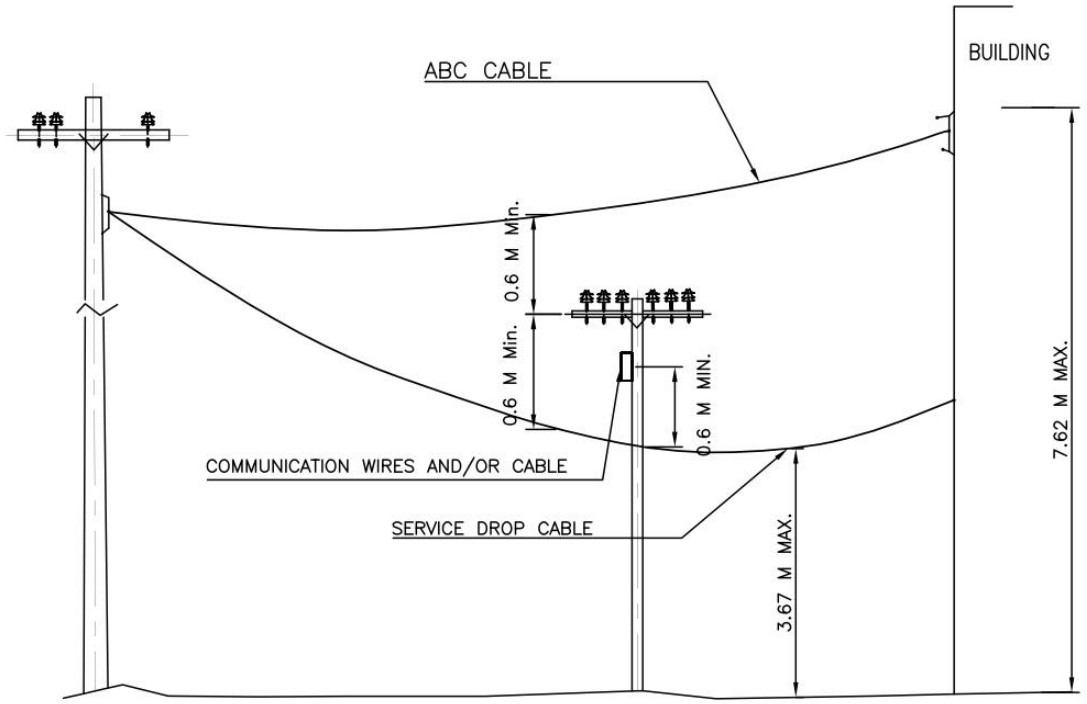

SERVICE DROP — Install service over communication facilities where practical and attach to ploe when available; otherwise cross under communication facilities; with proper clearance.

SERVICE DROP (0–600V) CROSSING OVER	CLEARANCE
DRIVEWAY TO RESIDENCE GARAGE OF OVER PARKING LOT EXCLUDING TRACKS	3.67 M.
DRIVEWAY AND COMMERCIAL PARKING LOT OR AREA SUBJECT TO TRUCK TRAFFIC	4.57 M.

Drawing **CSG-CLR-02**	**Conductor Clearance**	NEPAL ELECTRICITY AUTHORITY **Technical Services / Commercial Department** Distribution and Consumer Services

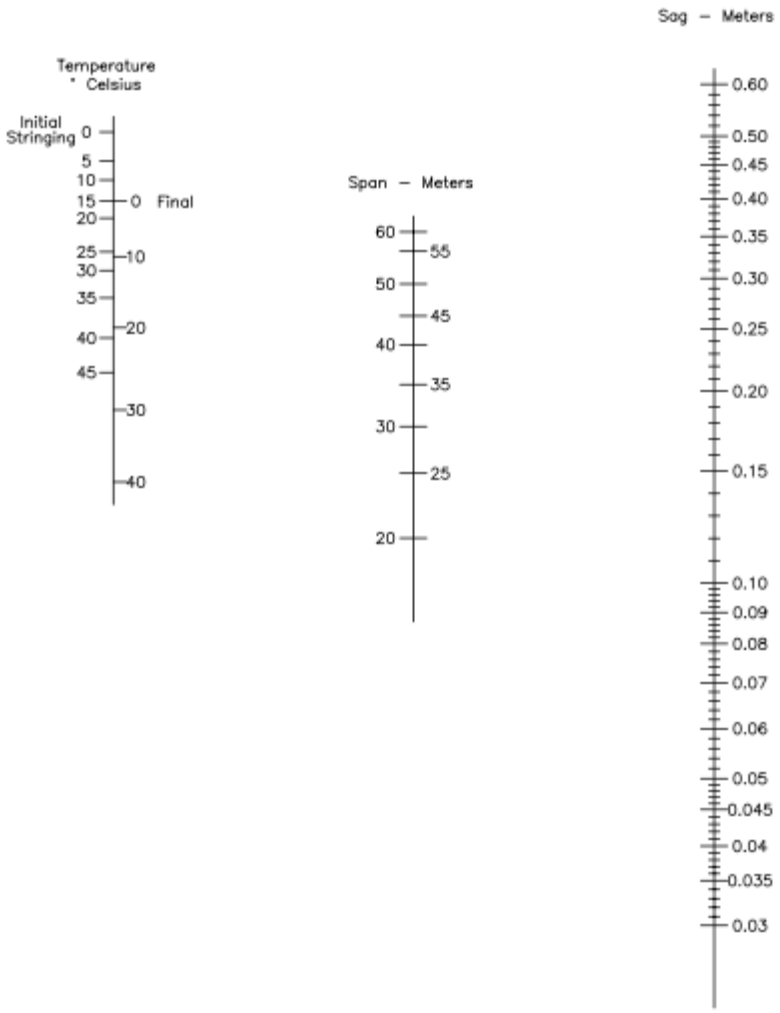

50 sq. mm Bare ACSR
40 Meter Ruling Span
540 Kg. Maximum Tension

Drawing **CSG-SAG-07**	**Sag Chart** **50 sq. mm ACSR**	NEPAL ELECTRICITY AUTHORITY **Technical Services / Commercial Department** Distribution and Consumer Services

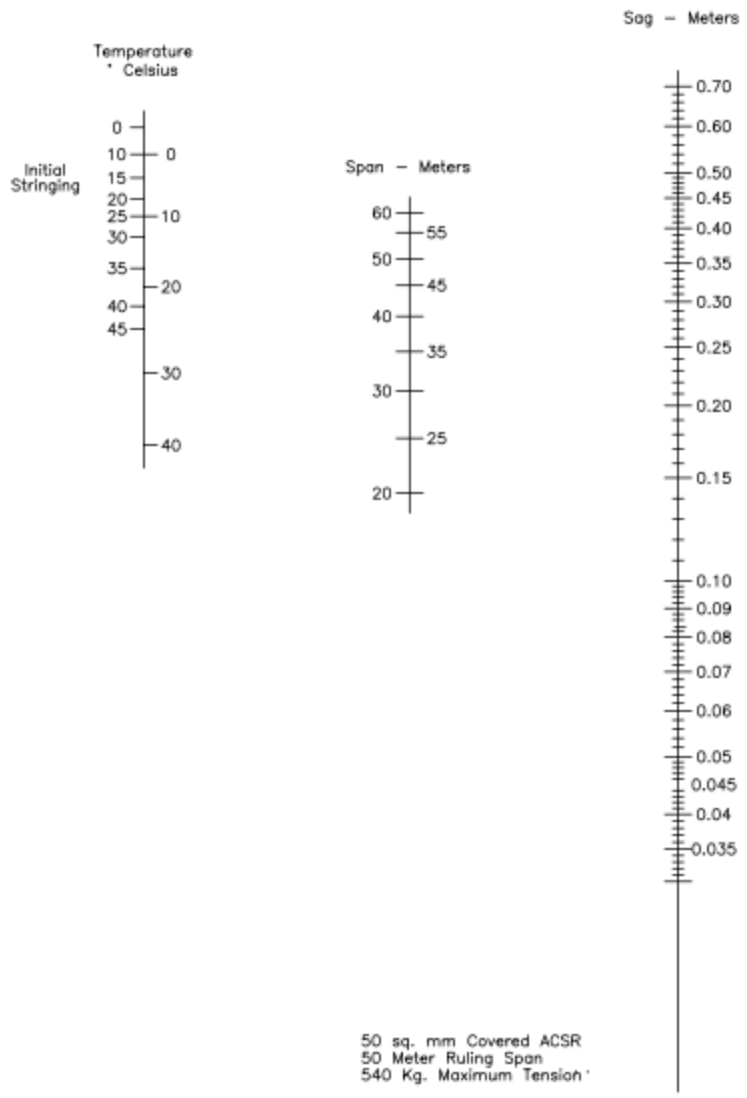

Drawing **CSG-SAG-08**	**Sag Chart** **50 sq. mm ACSR**	NEPAL ELECTRICITY AUTHORITY **Technical Services / Commercial Department** Distribution and Consumer Services

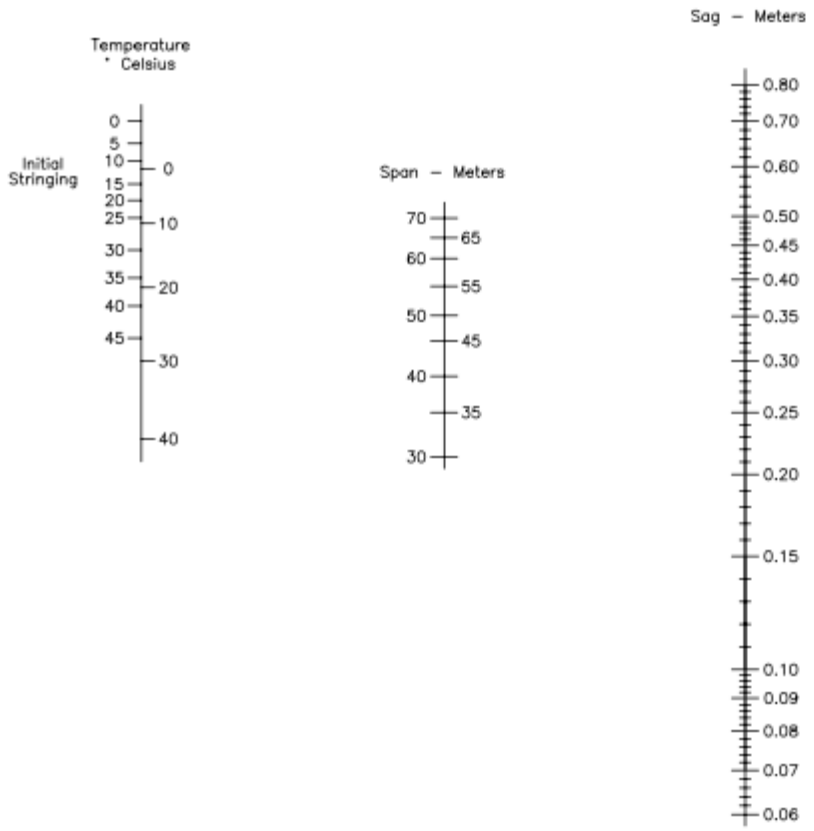

50 sq. mm Bare ACSR
50 Meter Ruling Span
555 Kg. Maximum Tension

Drawing **CSG-SAG-09**	**Sag Chart** **50 sq. mm ACSR**	NEPAL ELECTRICITY AUTHORITY **Technical Services / Commercial Department** Distribution and Consumer Services

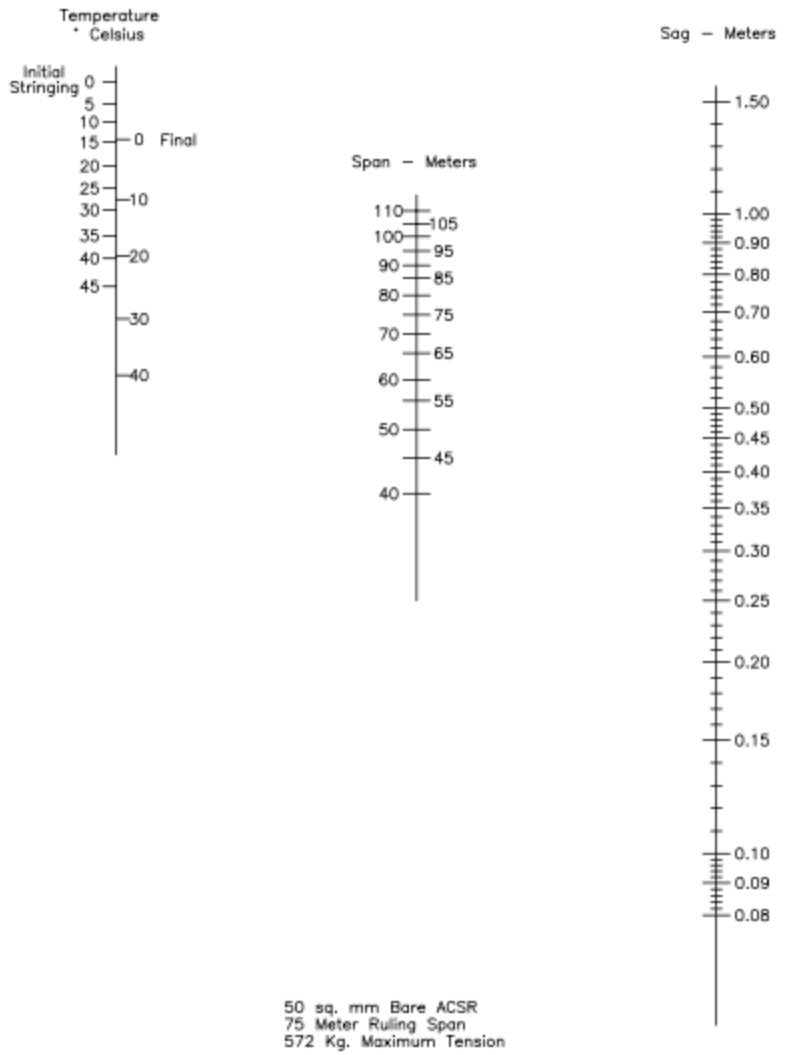

Drawing **CSG-SAG-10**	**Sag Chart** **50 sq. mm ACSR**	NEPAL ELECTRICITY AUTHORITY **Technical Services / Commercial Department** Distribution and Consumer Services

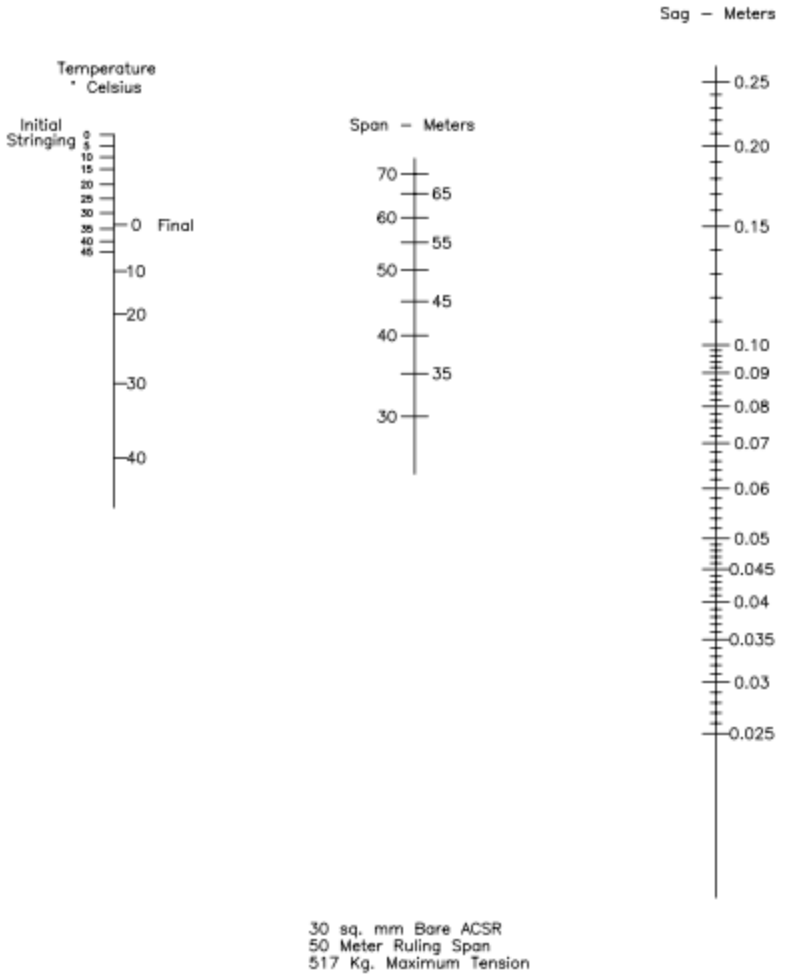

Drawing **CSG-SAG-11**	**Sag Chart** **30 sq. mm ACSR**	NEPAL ELECTRICITY AUTHORITY **Technical Services / Commercial Department** Distribution and Consumer Services

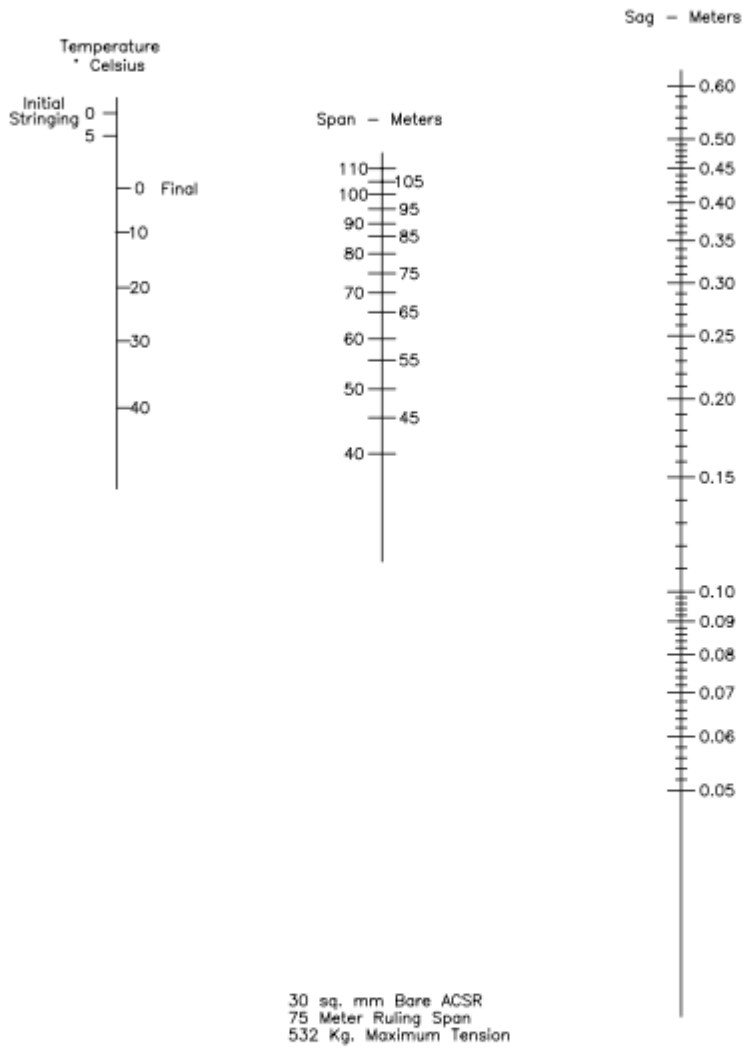

Drawing **CSG-SAG-12**	**Sag Chart** **30 sq. mm ACSR**	NEPAL ELECTRICITY AUTHORITY **Technical Services / Commercial Department** Distribution and Consumer Services

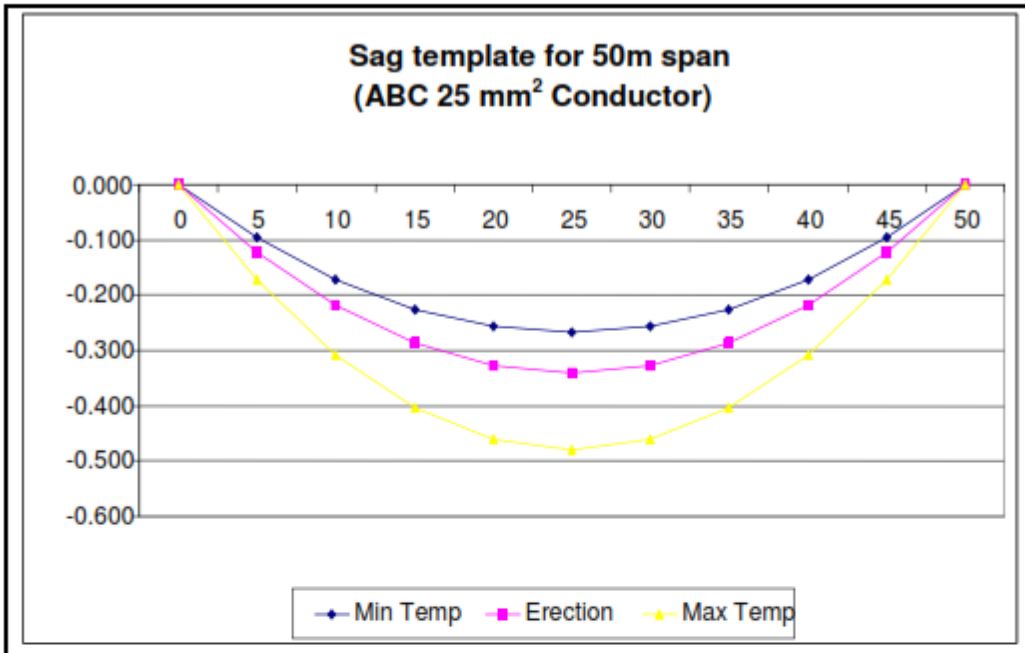

Drawing **CSG-SAG-13**	**ABC-SAG CHART** **25 SQ MM**	NEPAL ELECTRICITY AUTHORITY **Technical Services / Commercial Department** Distribution and Consumer Services

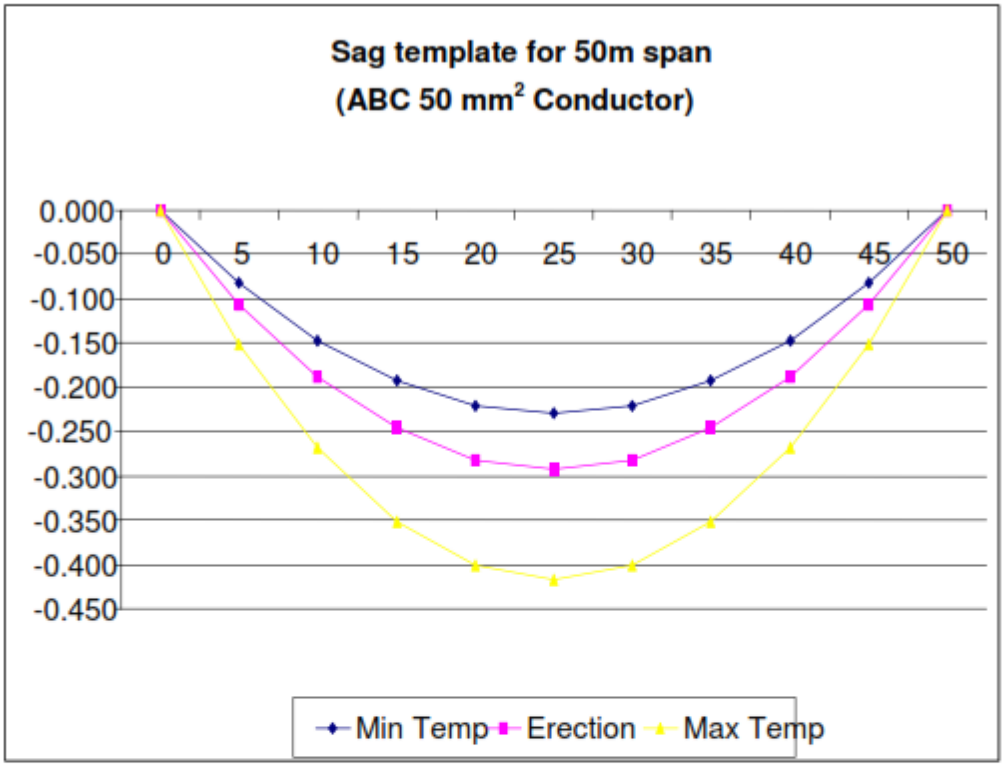

Drawing **CSG-SAG-14**	**ABC-SAG CHART** **50 SQ MM**	NEPAL ELECTRICITY AUTHORITY **Technical Services / Commercial Department** Distribution and Consumer Services

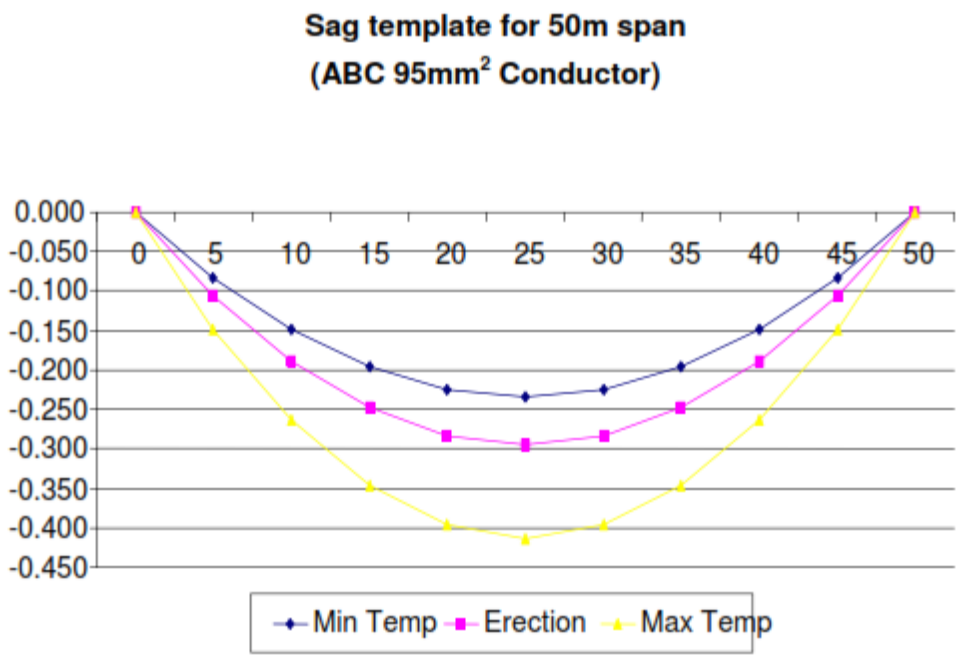

Drawing **CSG-SAG-15**	**ABC-SAG CHART** **95 SQ MM**	NEPAL ELECTRICITY AUTHORITY **Technical Services / Commercial Department** Distribution and Consumer Services

Section VIII. Bill of Quantities

NEPAL ELECTRICITY AUTHORITY

BAGLUNG DISTRIBUTION CENTER

Baglung

Fiscal Year 2073/074

Bill of Quantities

Sealed Quotation No. :BDC-073/74-07 (SQ)

Scheme :- Rural Electrification Works (Construction of HT/LT Line and installation of transformer)

Name of Place: Pandhavkhani VDC (Former)

S.N.	Description	Unit	Qty.	Rate (Rs)	Amount in Figures (Rs)	Amount in Words (Rs)	Remarks
	Labour & Transportation Cost						
1	Erection of Steel Tubular Poles (HT)	Nos	36.00				
2	Stringing 0.05Sq.inches ACSR Conductor in H.T. line one wire	K.m.	6.10				
3	Installation of Stay set HT	Set	16.00				

4	Erection of Steel Tubular pole LT	Nos	19.00				
5	Stringing 0.03Sq.inches ACSR Conductor in L.T. line one wire	K.m.	8.00				
6	Installation of Stay set LT	Set	27.00				
7	Installation of Transformer	Nos	1.00				
8	Earthing Works	set	2.00				
9	Transportation of hardware, Pole & conductor from Baglung store to working site by Tractor with loading and unloading	Ls	1.00				
	Total Labour & Transportation Cost						
	VAT 13%						
	Total Labour & Transportation Cost with VAT						

Name of Construction Firm:

Signature: Stamp

Section IX. Forms of Securities

Bid Security (Bank Guarantee)

Whereas, *[name of Bidder]* (hereinafter called "the Bidder") has submitted his Quotation (bid) dated *[date]* for the construction of *[name of Contract]* (hereinafter called "the bid").

Know all people by these presents that We *[name of Bank]* of *[name of country]* having our registered office at *[address]* (hereinafter called "the Bank") are bound unto *[name of Employer]* (hereinafter called "the Employer") in the sum of *[amount]* for which payment well and truly to be made to the said Employer, the Bank binds itself, its successors, and assigns by these presents.

Sealed with the Common Seal of the said Bank this *[day]* day of *[month]*, *[year]*. The conditions of this

obligation are:

(1) If, after bid opening, the Bidder withdraws his bid during the period of bid validity specified in the Form of Bid; or

(2) If the Bidder having been notified of the acceptance of his bid by the Employer during the period of bid validity:

(a) fails or refuses to execute the Form of Agreement in accordance with the Instructions to Bidders, if required; or

(b) fails or refuses to furnish the Performance Security, in accordance with the Instruction to Bidders; or

(c) does not accept the correction of the bid,

we undertake to pay to the Employer up to the above amount upon receipt of his first written demand, without the Employer's having to substantiate his demand, provided that in his demand the Employer will note that the amount claimed by him is due to him owing to the occurrence of one or any of the three conditions, specifying the occurred condition or conditions.

This Guarantee will remain in force up to and including the date *[number]* days[2] after the deadline for submission of bids as such deadline is stated in the Instructions to Bidders or as it may be extended by the Employer, notice of which extension(s) to the Bank is hereby waived. Any demand in respect of this Guarantee should reach the Bank not later than the above date.

Date _____ Signature of the Bank _____

Witness _____ Seal _____

_____

[signature, name, and address]

[2] *75 days after* submission bids as per the provision of PPR 2007. *The date should be inserted by the Employer before the bidding documents are issued.*

Performance Bank Guarantee

To: *[name and address of Employer]*

Whereas *[name and address of contractor]* (hereinafter called "the contractor") has undertaken, in pursuance of Contract No. *[number]* dated *[date]* to execute *[name of Contract and brief description of Works]* (hereinafter called "the Contract");

And whereas it has been stipulated by you in the said Contract that the contractor shall furnish you with a Bank Guarantee by a recognized bank for the sum specified therein as security for compliance with his obligations in accordance with the Contract;

And whereas we have agreed to give the contractor such a Bank Guarantee;

Now therefore we hereby affirm that we are the Guarantor and responsible to you, on behalf of the contractor, up to a total of *[amount of Guarantee] [amount in words]*[3] such sum being payable in the types and proportions of currencies in which the Contract Price is payable, and we undertake to pay you, upon your first written demand and without cavil or argument, any sum or sums within the limits of *[amount of Guarantee]*[4] as aforesaid without your needing to prove or to show grounds or reasons for your demand for the sum specified therein.

We hereby waive the necessity of your demanding the said debt from the contractor before presenting us with the demand.

We further agree that no change or addition to or other modification of the terms of the Contract or of the Works to be performed there under or of any of the Contract documents which may be made between you and the contractor shall in any way release us from any liability under this Guarantee, and we hereby waive notice of any such change, addition, or modification.

This Guarantee shall be valid for at least 30 days beyond the date of issue of Defects Liability Certificate.

Signature and seal of the Guarantor _____

Name of Bank _____

Address _____

Date _____

---

[3] *An amount is to be inserted by the Guarantor, representing the percentage of the Contract Price specified in the Contract, and denominated in Nepalese Rupees.*

[4] *The Unconditional (or "On-Demand") Bank Guarantee has the merit of simplicity and of being universally known and accepted by commercial banks. The contracting community, however, strongly objects to this type of Security because the Guarantee can be called (or threatened to be called) by Employers without justification. Employers should recognize the contractual conditions governing nonperformance by the Contractor and should normally act only on the advice of the Project Manager in calling a Performance Guarantee.*

Bank Guarantee for Advance Payment

To: *[name and address of Employer] [name of Contract]*

Gentlemen:

In accordance with the provisions of the Conditions of Contract, Sub clause 11.9("Advance Payment") of the above-mentioned Contract, *[name and address of contractor]* (hereinafter called "the contractor") shall deposit with *[name of Employer]* a Bank Guarantee to guarantee his proper and faithful performance under the said Clause of the Contract in an amount of *[amount of Guarantee] [amount in words]*[5]

We, the *[Bank or Financial Institution]*, as instructed by the contractor, agree unconditionally and irrevocably to guarantee as primary obligator and not as Surety merely, the payment to *[name of Employer]* on his first demand without whatsoever right of objection on our part and without his first claim to the contractor, in the amount not exceeding *[amount of Guarantee] [amount in words]*[6]

We further agree that no change or addition to or other modification of the terms of the Contract or of Works to be performed there under or of any of the Contract documents which may be made between *[name of Employer]* and the contractor, shall in any way release us from any liability under this Guarantee, and we hereby waive notice of any such change, addition, or modification.

The validity period of the guarantee shall be 30 days beyond the period scheduled for repayment of the advance payment and the guarantee shall remain valid and in full effect from the date of the advance payment under the Contract until the *[name of Employer]* receives full repayment of the same amount from the Contractor.
.

Yours truly,

Signature and seal: _____

Name of Bank/Financial Institution: _____

Address: _____

Date: _____

[5] *An amount is to be inserted by the Bank or Financial Institution representing the amount of the Advance Payment, and denominated in Nepali Rupees of the Advance Payment as specified in the Contract.*

[6] *An amount is to be inserted by the Bank or Financial Institution representing the amount of the Advance Payment, nd denominated in Nepali Rupees.*

Section X. Special Instruction to Bidders for e-Bidding

General procedures for electronic bid submission (e-submission) is described below.

Bid preparation
A Bidder who wish to submit the bid electronically may purchase the Bid Document directly from the Employer office or may download the bid document from the website and deposit the equivalent amount in the Revenue account of the employer as specified in the notice or/and Bid Document.

Description of bid submission procedure through electronically (e-submission) only:

i) Interested bidders shall, either purchase the Bid Document directly from the Employer office or may download the bid document from the website and deposit the equivalent amount in the Revenue account of the employer as specified in the notice or/and Bid Document.

ii) The Bidder shall fill the following documents and forms (in hard copy of issued bid documents), signed by the authorized representative with seal of the company
   a) Bill of Quantity (BOQ) with rate, amount
   b) Forms of Bid, Qualification Information

iii) The Bidder shall then scan the completed original documents, forms in PDF files with appropriate filename shown in the table below.

S No	Document	PDF File Name	Requirement	Remarks
1	Letter of Bid	Letter of Bid-1	Mandatory	
2	Bid Security (Bank Guarantee)	Bid Security-2	Mandatory	
3	Company Registration	Company Reg-3	Mandatory	All firms of JV
4	VAT Registration	VAT Reg-4	Mandatory for National firms	All firms of JV
5	Tax clearances certificate for F/Y 072/73	Tax-5	Mandatory for National firms	All firms of JV
6	Power of Attorney of Bid Signatory	Power of Att-6	Mandatory	
7	Business Registration (License) Certificate	License-7	Mandatory	
8	Bank Voucher for Cost of Bidding document	Voucher-8	Mandatory	
9	Joint Venture Agreement	JV-Doc-9	Mandatory for JV Firm	In case of JV
10	Qualification Information	Qualifications-10	Mandatory	
11	Applicable Price Adjustment Table	Price adjust-11	Mandatory if applicable	
12	Complete BOQ	BOQ-12	Mandatory	
13	Eligibility Information	Eligibility-13	Mandatory	Additional Documents
14	Schedule of Requirement	Sch. Of Req.-14	Mandatory	
15	Manufacturers Authorization	Auth-15	Not Mandatory	
16	Technical Data Sheet	TDS-16	Mandatory	
17	Catalogues mentioned in Technical Specification	Catalogues-17	Mandatory	
18	Type Test Certificate	Certificate-18	Not Mandatory	
19	ISO certificates	ISO-19	Not Mandatory	

Note; Mandatory means the mentioned files shall be in e-submission and non-submission of such file shall be considered as non-responsive.

iv) For e-submission purpose the Bidder shall, at first, register in the e-procurement section of NEA

Web site http://www.nea.org.np

v) After preparing all the required bidding documents in PDF scan files as specified in (ii) and (iii), the Bidder shall upload the PDF bid files and submit his complete bid online through e-procurement section of NEA website http://www.nea.org.np within the specified date and time.

The Employers address for the purpose of e-submission of bid:

The Employers address for the purpose of electronic Bid submission is e-procurement section of http://www.nea.org.np.

In case of e-submission of bid, the bidder shall submit his bid electronically in PDF files in the manner as specified above and additional submission of hard copy of "Original plus one copy of bid" is not mandatory.

In case both the electronic bid and original bid in hard copy are submitted to the Employer within the specified time period, the Bidder's electronic bid and original bid in hard copy will be accepted for evaluation provided the Bid price in Bill of Quantity Sheet is same. If there is any discrepancy in Bid price in Bill of Quantity between the electronic and original bid in hard copy it will be treated as two separate bids from one Bidder and hence, both the electronic bid and original bid in hard copy shall be disqualified, as per ITB Clause.

However, for electronically submitted bid in PDF files, the bidder shall be required to submit documents/clarifications as specified in ITB Clause.

The deadline for e-submission of bids shall be;

- Bidders shall be also explained about the details of e-submission procedures in the pre-bid meeting.
- The e-procurement system will accept the e-submission of bid during office hours from the date after publishing the notice and will automatically not allow the e-submission of bid after the deadline for submission of bid, as specified above.
- The standard time for e-submission is Nepalese standard time as set out in the server of NEA.
- In case of e-submission of bid, the Bidder shall submit his bid electronically in PDF files in the manner as specified in ITB Clause only, and submission of "original plus one copy" shall not be required before deadline for submission time as per ITB Clause.

Provision for Substitution or Modification or Withdrawal of Bid

When a bidder submits his bid in hard copy the e-procurement section does not allow the Bidder to submit his Substitution, or Modification, or Withdrawal through e-procurement section of NEA's Web site.

In case of e-submitted bid;

- Bidders may submit his Substitution or Modification or Withdrawal either in hard copy or through e-submission.
- For Substitution of Bid the Bidder shall follow similar steps as specified in ITB -Clause with a Substitution letter in PDF file.
- For Modification or Withdrawal of bid the Bidder is required to submit PDF scan copy of their Modification or Withdrawal letter and a written Power of Attorney of the signatory for Modification/ Withdrawal, duly signed by Authorized Representative/s of the Firm / all authorized Joint Venture partners.

Bid opening for e-submitted bid;

- Electronically submitted bid shall be opened first at the same time and date as specified in the ITB and IFB notice.
- The e-procurement system allows the Employer to download and open the e-submitted bid files from bidders only after the time for opening the bids.
- The e-submitted bids must be readable through open standards interfaces. Unreadable and or partially submitted bid files (not complying the ITB Clauses) shall be considered incomplete and rejected for further bid evaluation.
- After opening of e-submitted bids files, all files shall be printed and recorded at the time of bid opening.

In case of "WITHDRAWAL" or "MODIFICATION" or "SUBSTITUTION" by the Bidder through e-submission, the e-submitted PDF files under "WITHDRAWAL" or "MODIFICATION" or "SUBSTITUTION" shall be opened and read out first. Bids for which acceptable notice of "WITHDRAWAL" or "SUBSTITUTION" has been submitted pursuant to ITB Clause shall not be opened.

Clarification of Bid

In case of e-submission of bid, the Bidder shall be required to submit the original completed Bid consisting of Forms of Bid, Qualification Information, Special Conditions of Contract, Bill of Quantities, Supplementary Information and other clarifications for verification purpose upon notification to do so from the Employer.

Examination of e-submitted Bids and Determination of Responsiveness

For a e-submitted bid to be substantially responsive the requirement as specified in the ITB Clauses shall be fulfilled.

Evaluation and Comparison of e-submitted Bids

In case of e-submitted bids, the Employer evaluates the bid based on the information as per electronically submitted bid files. For clarification/ verification purpose, the Employer may request the Bidder to submit documents/ clarifications as specified in ITB Clause.

In case, the Bidder could not substantiate or provide evidence to prove the information provided in e-submitted bid through documents/ clarifications as per ITB Clause, the bid shall not be considered for further evaluation and respective ITB Clause for forfeiture of bid security shall be applicable.

Steps to be followed by a Bidder to submit the electronic bid submission

1. Prepare the paper bid document
   - Either purchase the Bid Document directly from the Employer office or may download the bid document from the website and deposit the equivalent amount in the Revenue account of the employer as specified in the notice or/and Bid Document.
   - Fill the rates and amount in BOQ,
   - Fill the Bid Form,
   - Prepare the necessary copy of Company registration, VAT/PAN registration, Tax clearance certificate,
   - Prepare the necessary specific papers like Power of Attorney for bid signatory, Joint Venture agreement, if bidding in JV,
   - Prepare summary of qualification information sheet (Financial turnover, Experience, Manpower, Equipment, Credit line, Litigation etc) in the specified format,
   - Prepare the bid guarantee letter for the specified bid security amount and in the specified format,

2. Prepare the Electronic bid files in pdf format

Once prepared the above paper documents the bidder shall prepare the electronic bid files in pdf format as follows;

- Scan the above documents in pdf format, give the specific file name for each document,
- Prepare all scanned bid files in pdf format and save them in a separate folder in own computer to ease bid uploading process.

3. Electronic bid submission

- Once the electronic bid files are ready the Bidder shall connect to internet,
- Open the NEAs website www.nea.org.np and open E-procurement section,
- Register in the Bidders name and get User name and Password for Login,
- Confirm the registration by clicking the specified link in auto generated e-mail from NEAs web site,
- After confirmation for bidder's registration click Bidder, fill User name, Password and Login,
- Choose and click the specific tender notice for which the electronic bid files has been prepared,
- Click the Bid now button to submit the electronic bid files,
- Upload each specified electronic bid files by clicking the Upload button and select the respective bid files by Browsing,
- Once all the electronic bid files are uploaded, click the Submit the Bid button for final e-submission of electronic Bid,
- Once the e-submission is successfully completed the Bidder shall receive a auto generated confirmation e-mail from the NEAs website,
- Bidder to keep the conventional paper bid document, qualification information, and other related documents safe as the Buyer may seek the supporting bid documents and clarifications, as necessary during bid evaluation process.
- The Bidder shall submit the necessary supporting documents and clarifications (conventional bid document)