NEPAL ELECTRICITY AUTHORITY

(A Government Of Nepal Undertaking)

Distribution and Consumer Services Directorate Biratnagar
Regional Office Biratnagar

Sealed Quotation

For

Electrification Works at Bhojpur District

Sealed Quotation No: NEA-BRO-2074/075-10, SQ

NEPAL ELECTRICITY AUTHORITY
Distribution and Consumer Services Directorate
Biratnagar Regional Office
Biratnagar
Tel : 021-436306/436112

June, 2018

Table of Contents

Section I : Invitation for Sealed Quotation _____3

Section II: Instructions to Bidders_____5

Section II. Instructions to Bidder_____6

Section III : Conditions of Contract _____11

Section IV. Schedule of Requirements_____18

Section V : Technical Specifications and Drawing _____19

Section VI : Sample Forms_____58

Section I : Invitation for Sealed Quotation

Name of the Office : **Nepal Electricity Authority, Biratnagar Regional Office.**

Address of the Office: **Malaya Road, Rani Biratnagar .**

Invitation for Sealed Quotation

Sealed Quotation No: **NEA-BRO-2074/075-10**

1. The ***NEA , Biratnagar Regional Office*** invites sealed quotations from registered Contractors for the Electrification Works **.**

2. Interested eligible Suppliers may obtain further information and inspect the Sealed quotation Forms at the office of NEA , Biratnagar Regional Office , Malaya Road , Rani , Biratnagar , e-mail : kmrodcs@yahoo.com . Tel No. : 021-436306/436089**.**

3. Sealed Quotation Forms may be purchased by eligible Suppliers on the submission of a written application and upon payment of a non-refundable fee of ***Rs.1000.00*. deposited in account No. 0706017500018 at Nabil Bank Biratnagar .**

4. Sealed Quotations must be submitted to the above office on or before ***12:00 Hrs*** on 2075/3/15 (June 29, 2018) Quotation received after this deadline shall not be accepted.

5. Quotations must be valid for a period of ***45 days*** after opening of Sealed quotations and must be accompanied by Cash Security or Bank Guarantee, amounting to a ***minimum of Nrs. 29,000.00 (inclusive of VAT)***, which shall be ***valid for 75 days*** after opening of the Sealed Quotations.

6. If bidder wishes to submit the Cash Security, the cash should be deposited in Deposit Account **No. 0706017500016 at Nabil Bank , Biratnagar** and submit the receipt of the deposited amount of cash along with the Sealed Quotation.

7. Sealed Quotation shall be opened in the presence of Suppliers' representatives who choose to attend at 14:30 Hrs. On 2075/3/15 (June 29, 2018) at the office of ***NEA , Biratnagar Regional Office*.**

8. If the last date of purchasing, submission and opening falls on a government holiday then the next working day shall be considered the last day.

9. The Purchaser reserves the right to accept or reject, wholly or partly any or all the Sealed Quotations without assigning any reason, whatsoever.

10. For more details please see the notice attached here with .

Invitation for Sealed Quotation

Date of first Publication: 2075/2/31 (14 June, 2018)

दरभाउपत्र आह्वानको सूचना

(गोरखापत्र दैनिकमा सूचना प्रकाशित मिति : २०७५/०२/३१)

यस कार्यालय तथा अन्तर्गत तपसिलका वितरण केन्द्रको निम्नलिखित कार्य दरभाउपत्रको माध्यमबाट गराउनुपर्ने भएकोले सम्बन्धित कार्यको लागि नेपाल सरकारबाट ईजाजतप्राप्त, VAT, PAN मा दर्ता भएका, आयकर तिरेका, रजिष्टर्ड कम्पनी/निर्माण/आपूर्तिकर्ता वा अस्तियारप्राप्त फर्मबाट नियमानुसार तोकिएको सर्तको अधिनमा रही कार्य गर्न दरभाउपत्र आह्वान गरिएको विस्तृत सूचना सम्बन्धित कार्यालयको सूचना पाटीमा टाँस गरिएको छ। दरभाउपत्रहरू **E-Bidding** का लागि नेपाल विद्युत प्राधिकरणको वेबसाइट **eproc.nea.org.np** मा समेत राखिएको छ। दरभाउपत्रसम्बन्धी अन्य थप कुरा बुझ्नुपरेमा उल्लेखित वेबसाइट वा सम्बन्धित कार्यालयमा कार्यालय समयभित्र सम्पर्क राख्न सकिने छ।

सि. नं.	दरभाउपत्र नम्बर	कामको विवरण	दरभाउपत्रको मुल्य रु.	दरभाउपत्रको जमानत रु.	निर्माण कार्यको लागत अनुमान रु. (VAT सहित)	दरभाउपत्र खरिद गर्ने अन्तिम मिति र समय	दरभाउपत्र दाखिला गर्ने अन्तिम मिति र समय	दरभाउपत्र खरिद गर्ने कार्यालयको बैंक र खाता नं.	बिड्बण्ड जम्मा गर्ने कार्यालयको बैंक र खाता नं.	दरभाउपत्र खोलिने मिति र समय	सम्बन्धित कार्यालय
१.	NEA-BDC-2074/075-09,SQ	कचनकवल गा.पा.का विभिन्न स्थानमा विद्युतीकरण एच.टी/एल.टी लाइन निर्माण कार्य	१,०००।००	२७,०००।००	१०,४७,५८३।८२	२०७५।०३।१४ गते कार्यालय समयसम्म	२०७५।०३।१५ दिनको १२:०० बजेसम्म	एन एम बि बैंक, चन्द्रगढी ०६२००६०००१४६००००००८७	नबिल बैंक लि., चन्द्रगढी ४५०१०१७५००१११०	२०७५।०३।१५ दिनको १४.०० बजे	भद्रपुर वितरण केन्द्र ०२३-४५५६११
२.	NEA-DHANDC-2074/075-18, SQ	LT Line Extension works	१,०००।००	२४,०००।००	९,४४,९९३।८२	२०७५।०३।१४ गते कार्यालय समयसम्म	२०७५।०३।१५ दिनको १२:०० बजेसम्म	राष्ट्रिय वाणिज्य बैंक धनकुटा राजस्व खाता, ५५२	राष्ट्रिय वाणिज्य बैंक धनकुटा, धरौटी खाता, ११७०	२०७५।०३।१५ दिनको १५:०० बजे	धनकुटा वितरण केन्द्र फोन ०२८-५२००२१
३.	NEA-DHANDC-2074/075-19, SQ	LT Line Extension works	१,०००।००	२३,०००।००	८,९८,३०८।६८					२०७५।०३।१५ दिनको १५:१५ बजे	
४.	NEA-DHANDC-2074/075-20, SQ	HT/LT Line Extension works	१,०००।००	१६,०००।००	६,०२,५७६।६५					२०७५।०३।१५ दिनको १५:३० बजे	
५.	NEA-DHANDC-2074/075-21, SQ	HT/LT Line Extension & Transformer Installation works	१,०००।००	२४,०००।००	९,३१,९६२।१३					२०७५।०३।१५ दिनको १५:४५ बजे	
६.	NEA-BRO-2074/075-08, SQ	Electrification works at Taplejung District	१,०००।००	२९,०००।००	१०,२४,०५६।३१	२०७५।०३।१४ गते कार्यालय समयसम्म	२०७५।०३।१५ दिनको १२:०० बजेसम्म	नबिल बैंक विराटनगर ०७७६०१७५०००१८	नबिल बैंक विराटनगर ०७७६०१७५०००१६	२०७५।०३।१५ दिनको १४:०० बजे	विराटनगर क्षेत्रीय कार्यालय
७.	NEA-BRO-2074/075-09, SQ	Electrification works at Panchthar District	१,०००।००	१९,०००।००	६,७३,८६८।६९					२०७५।०३।१५ दिनको १५:१५ बजे	
८	NEA-BRO-2074/075-10, SQ	Electrification works at Bhojpur District	१,०००।००	२९,०००।००	१०,१८,८२४।५२					२०७५।०३।१५ दिनको १५:३० बजे	

नेपाल विद्युत् प्राधिकरण
विराटनगर क्षेत्रीय कार्यालय, विराटनगर, फोन : ०२१-४३६३०६

Section II: Instructions to Bidders

Notes on the Instructions to Bidders

This section of the bidding documents should provide the information necessary for Interested Suppliers to prepare responsive bids, in accordance with the requirements of the Purchaser. It should also give information on bid submission, opening and evaluation, and award of Contract.

These Instructions to Bidders shall not be part of the Contract and shall cease to have effect once the Contract is signed.

Section II. Instructions to Bidder

1. Scope of Works

1.1 The Purchaser stated in the Invitation for Quotation invites bids for the the supply, delivery, Erection/ Construction of HT/LT Lines and related services as detailed in attached specifications, drawings and the bill of quantities provided herein. .

2. Eligible Bidder

2.1 This Invitation for Bids is open to all registered Suppliers with qualifications as described below:

a. Up to date Firm/Company Registration Certificate

b. VAT and PAN Registration Certificates

c. Tax Clearance Certificate

d. Power of Attorney

3. One Bid per Bidder

3.1 Each Bidder shall submit only one quotation, A Bidder who submits more than one quotation shall cause all the quotations with the Bidder's participation to be disqualified.

4. Content of Quotation Form

4.1 The Quotation Form comprise the documents listed below:

1. Invitation for Sealed Quotations
2. Instructions to Bidders
3. Conditions of Contract
4. Schedule of Requirements
5. Technical Specifications
6. Sample Forms
7. Bid Security
8. Form of Agreement
9. Performance Security
10. Bank Guarantee for Advance Payment

5. Clarification

5.1 A prospective Supplier/Bidder may obtain clarification on the Quotation Form from the the Purchaser stated in Invitation for Quotation.

6. Language of Quotation

6.1 All documents relating to the Quotation shall be in English or in Nepali.

7. Documents Comprising Quotation

7.1 The Quotation by the Bidder shall comprise the following:

a. Quotation and Price Schedules

b. Bid Security

c. Schedule of Requirements

d. Technical Specifications

8. Quotation Prices

8.1 The Bidder shall indicate on the appropriate Price Schedule the unit prices (where applicable) and total price of the goods to be supplied under the contract.

8.2 All duties, taxes and other levies payable by the Bidder under the contract shall be included in the rates, prices and total Bid Price submitted by the Bidder.

8.3 Price quoted by the Bidder shall remain fixed and valid until completion of the Contract Performance and will not be subject to variation in any account.

9. Quotation Validity

9.1 The Quotation shall remain valid for the period of 45 days after opening of the quotation.

10. Quotation Security

10.1 The Bidder shall furnish a Security in Nepali Rupees in the amount not less than Nrs. 29,000.00 or as per Notice. The Bid Security shall remain valid for a period of 75 days after opening of the quotation.

10.2 The Security shall be in the form of cash voucher deposited in the Bank Account of the Employer specified in the notice for "Invitation for Quotation" or a bank guarantee from a bank acceptable to the Employer.

11. Format and Signing of Quotations

11.1 The Quotation shall be typed or written in indelible ink and shall be signed by an authorized person. Any entries or amendments including alternations, additions or corrections made shall be initialled by the same authorized person.

12. Sealing and Marking of Quotations

12.1 The Bidder shall submit his Quotation in sealed envelopes. The envelope shall be addressed to the Purchaser specified in the Invitation for Quotation and shall bear the name and identification number of the quotation.

13. Deadline for Submission of Quotations

13.1 Quotations shall be delivered to the Purchaser at the address no later than the time and date specified in the Invitation for Quotation.

14. Late Quotation

14.1 Any Quotation received by the Purchaser after the deadline shall not be accepted and shall be returned unopened to the Bidder upon request.

15. Modification and Withdrawal

15.1 Quotations once submitted shall not be withdrawn or modified.

16. Bid Opening

16.1 The Purchaser shall open the Quotations in the presence of the Bidders' representatives who choose to attend at the time and in the place as specified in the Invitation for Quotation..

16.2 The Purchaser shall prepare and provide minutes of the opening including the information disclosed to those present.

17. Process to be Confidential

17.1 Information relating to the examination, evaluation and comparison of Quotations and recommendations for the award of a contract shall not be disclosed to Bidders or any other persons not officially concerned with such process until the award to the successful Bidder has been announced. Any efforts by the Bidder to influence the Purchaser in the Quotation evaluation, comparison or contract award decisions may result in rejection of Bidder's quotation.

18. Examination of Quotations

18.1 Prior to the detailed evaluation of Quotations, the Purchaser shall determine whether each Quotation

(a) meets the eligibility criteria defined in Clause 2;

(b) has been properly signed; (c) is accompanied by the required securities; and (d) is substantially responsive to the requirements of the Bidding documents.

19. Evaluation and Comparison of Quotations

19.1 In evaluating the Quotations, the Purchaser shall determine for each Quotation the evaluated Bid Price by adjusting any corrections for errors. Quotations shall be checked by the Purchaser for any arithmetic errors. Errors shall be corrected by the Purchaser as follows:

a. where there is a discrepancy between the amounts in figures and in words, the amount in words shall govern; and

b. where there is a discrepancy between the unit rate and the line item total resulting from multiplying the unit rate by the quantity, the unit rate as quoted shall govern

19.2 If the Bidder does not accept the corrected amount, the Quotation shall be rejected and the Security pursuant to Clause 10 may be forfeited.

20. Award of Contract

20.1 The Purchaser shall decide the award of the contract, within 15 days of the opening of the quotation, to the Bidder whose Quotation is within the approved estimate and who has offered the lowest evaluated Bid Price, provided that such Bidder has been determined to be eligible in accordance with the provisions of Clauses 2.

21. Purchaser's Right to Accept or Reject

21.1 The Purchaser reserves the right to accept or reject any Quotation or to cancel the bidding process and reject all Quotations, at any time prior to the award of the contract, without assigning any reasons whatsoever and without thereby incurring any liability to the affected Bidder or Bidders.

22. Notification of Award and Signing of Agreement

22.1 The Bidder whose Quotation is accepted and all other participating bidders shall be notified of the award by the Purchaser. Within 7 days of receipt of the notification, the successful Bidder shall deliver the Performance Security pursuant to Clause 23 and sign the Agreement.

22.2 Inability of the Bidder to make an Agreement within the above stated period shall result in cancellation of the Contract Award and forfeiture of the Bidder's Security, upon which the Contract shall then be awarded to the next successive successful Bidder.

23. Performance Security

23.1 The successful Bidder shall deliver to the Purchaser a Performance Security in cash or Bank Guarantee acceptable to the Purchaser equivalent to 5% of the Quotation amount.

Section III : Conditions of Contract

1. Definitions

1.1 In this contract, the following terms shall be interpreted as indicated:

a. "The Contract" means the agreement entered into between the Purchaser and the Supplier, as recorded in the Contract Form Signed by the parties, including all attachments and appendices thereto and all documents incorporated by reference therein;

b. "The Contract Price" means the price payable to the Supplier under the contract for the full and proper performance of its contractual obligation;

c. "The Goods" means Equipment and related Accessories and spare-parts or any other materials which the Supplier is required to supply to the Purchaser under the contract;

d. "Services" means services ancillary to the supply of the goods such as transportation and insurance including the installation, commissioning and the operational and maintenance training of the supplied equipment.

e. "The Purchaser" means the procuring entity purchasing the goods;

f. "The Supplier" means the organization supplying the goods and services under this contract.

2. Technical Specification

2.1 The goods supplied under this contract shall confirm to the standards mentioned in the Technical Specification.

3. Patent Right

3.1 The Supplier shall indemnify the Purchaser against all third-party claims of infringement of patent, trademark or industrial design rights arising from use of goods or any part thereof in the Purchaser's country.

4. Performance Security

4.1 Within seven days (7) of receipt of award of contract from the Purchaser the successful Bidder shall furnish the performance security in accordance with the Sub - Clause 4.3 of the

Conditions of Contract in the Performance Security Form provided in the Bidding Documents.

4.2 Failure of the successful Supplier to comply with the requirement of Sub - clause 4.1 shall constitute sufficient grounds for the annulment of the award and forfeiture of the bid security, in which event the Purchaser may make the award to the next lowest Supplier or call for new sealed quotations.

4.3 4.3 The performance security will be as follows:

4.4 If bid price of the bidder selected for acceptance is up to 15% less then the approved cost estimate, the performance security amount shall be 5 % of the Sealed Quotation price.

4.5 For the Sealed Quotation price less than 15% of the cost estimate, the performance security amount shall be determine as follows:

4.6 Performance Security amount= {(0.85× cost estimate - SQ price)× 0.5} + 5% of SQ price .

4.7 4.4 The validity of Performance Security shall be one (1) year after the final installation and commissioning of the Goods and the issue of final acceptance certificate to the Suppliers. The Supplier shall promptly extend the validity suitably to cover agreed extension of the warranty period of the supplied goods.

4.8 The performance security shall be released within 28 days of completion of warranty period and upon submission of claim by the Supplier.

5. Inspection and Tests

5.1 The Purchaser or its Representative shall have the right to inspect and/or test the goods to confirm their conformity to the Technical Specification and the quality of performance after the supply and delivery of good to the Purchaser's premises.

6. Packing

6.1 The Supplier shall provide such packing of the goods as is required to prevent their damage or deterioration during transmit to their final destination as indicated in the contract.

6.2 The packing shall be sufficient to withstand, without limitation, rough handling during transit and exposure to extreme temperatures, salt and precipitation during transit and open storage.

6.3 The packing, marking and documentation within and outside the packages shall comply strictly with such special requirements as shall be expressly provided in accordance with international standard and practice.

7. Delivery of Goods

7.1 Delivery of the goods shall be made by the Supplier in accordance with the terms specified by the Purchaser in its Schedule of Requirements.

7.2 The terms "EXW", "FOB", "CIF", "CIP" etc., shall be governed by the rules prescribed in the current edition of INCOTERMS published by the International Chamber of Commerce (ICC), Paris.

8. Insurance

8.1 The goods supplied under the contract shall be fully insured in the currency of the Sealed Quotation price against loss or damage incidental to manufacture or acquisition, transportation, storage and delivery in the manner specified.

8.2 Where delivery of the goods is required by the Purchaser on a CIF or CIP basis to a specified destination, the Supplier shall arrange and pay for insurance, naming the Purchaser as the beneficiary and the Supplier shall be required to meet all transport and storage expenses until delivery.

9. Warranty

9.1 The Supplier warrants that all the goods supplied under the contract shall fully comply with the specification laid down in the contract.

9.2 The warranty shall remain valid for one year after the goods have been delivered to the final destination indicated in the contract, and accepted by the Purchaser after installation and commissioning of equipment by the Supplier.

9.3 The Purchaser shall promptly notify the Supplier in writing of any claims arising under this warranty.

9.4 Upon receipt of such notice, the Supplier shall, with all reasonable speed, replace the defective goods without cost to the Purchaser. The Supplier will be entitled to remove, at its own risk and cost, the defective goods.

10. Payment

10.1 Payment shall be made in the currency in which the contract price has been stated in the Supplier's Sealed Quotation.

10.2 Payment of the goods supplied from within Nepal shall be made in Nepali Rupees after the delivery and installation and commissioning of goods to the satisfaction of the Purchaser.

10.3 Payment of the goods to be imported from abroad shall be made in the following manner:

a. Ten (10) percent of the Contract Price shall be paid within fifteen (15) days of signing of the Contract, and upon submission of claim and bank guarantee for equivalent amount valid until the goods are delivered and in the form provided in the SQ documents or another form acceptable to the Purchaser.

b. Site delivery: Eighty (80) percent of the contract price of the Goods shipped or delivered shall be paid through irrevocable confirmed letter of credit opened in favor of the Supplier in a bank in its country, upon submission of clean Bill of Lading and other documents or on Site delivery

c. On acceptance: Ten (10) percent of the contract price of goods received shall be paid within thirty (30) days of receipt of the goods upon submission of claim supported by the acceptance certificate issued by the Purchaser.

11. Prices

11.1 Prices charged by the Supplier for goods delivered under the contract shall not vary from the prices quoted by the Supplier in its sealed quotation.

12. Changed Order

12.1 Where the Purchaser desires to make changes in **Schedule of Requirement**, it shall not exceed more than 15 percent.

13. Liquidated Damages

13.1 If the Supplier fails to deliver any or all of the goods within the time period specified in the contract, the Purchaser shall, without prejudice to its other remedies under the contract, deduct from the contract price, as liquidated damages, a sum equivalent to 0.05 percent of the contract price of delayed goods for each day of delay until actual delivery, up to a maximum deduction of 10 percent of the delayed goods' contract price. Once the maximum is reached, the Purchaser may consider termination of the contract.

14. Resolution of Disputes

14.1 If any dispute or difference of any kind whatsoever shall arise between the Purchaser and the Supplier in connection with or arising out of the Contract, the parties shall make every effort to resolve amicably such dispute or difference by mutual consultation.

14.2 If, after thirty (30) days, the parties have failed to resolve their dispute or difference by such mutual consultation, then either the Purchaser or Supplier may give notice to the other party of it's intention to commence arbitration, as hereinafter provided, as to the matter in dispute, and no arbitration in respect of this matter may be commenced unless such notice is given.

14.2.1. Any dispute or difference in respect of such a notice of intention to commence arbitration has been given in accordance with this Clause shall be finally settled by arbitration.Arbitration may be commenced prior to or after delivary of the Goods under the Contract.

14.2.1. Arbitration proceedings shall be conducted in accordance with in accordance with the rules of Nepal Council of Arbitration (NEPCA).

14.3 Notwithstanding any reference to arbitration herein,

a. the parties shall continue to perform their respective obligations under the Contract unless they otherwise agree; and

b. the Purchaser shall pay the Supplier any monies due the Supplier.

15. Governing Language

15.1 The Governing Language shall be: Nepali or English

16. Applicable Law

16.1 The applicable law shall be Laws of Nepal.

17. Notices

17.1 Purchaser's address for notice purposes: **NEA, Biratnagar Regional Office, Malaya Road, Rani, Biratnagar.**

17.2 Supplier's address for notice purposes: ……

18. Taxes and Duties

18.1 The Supplier shall be entirely responsible for all taxes, duties, licence fees and other such levies imposed by the GON.

19. Operation, Maintenance and Spare-parts Manuals

19.1 The successful Supplier shall supply 2 copies of manufacturer's operation, maintenance and spare-part manuals of the goods (Equipment).

20. Conduct of Suppliers

20.1 The Supplier shall be responsible to fulfil his obligations as per the requirement of the Contract Agreement, Bidding documents, GoN's Procurement Act and Regulations.

20.2 The Supplier shall not carry out or cause to carry out the following acts with an intention to influence the implementation of the procurement process or the procurement agreement :

a. give or propose improper inducement directly or indirectly,

b. distortion or misrepresentation of facts

c. engaging or being involved in corrupt or fraudulent practice

d. interference in participation of other prospective bidders.

e. coercion or threatening directly or indirectly to impair or harm, any party or the property of the party involved in the procurement proceedings,

f. collusive practice among bidders before or after submission of bids for distribution of works among

bidders or fixing artificial/uncompetitive bid price with an intention to deprive the Purchaser the benefit of open competitive bid price..

g. contacting the Purchaser with an intention to influence the Purchaser with regards to the bid or interference of any kind in examination and evaluation of the bids during the period after opening of bids up to the notification of award of contract

21. Blacklisting Supplier

21.1 Without prejudice to any right of the Purchaser under this Contract, the GoN, Public Procurement and Monitoring Office(PPMO) may blacklist a Supplier for his conduct up to three years on the following grounds and seriousness of the act committed by the supplier:

a. if it is proved that the supplier committed acts pursuant to the Sub - clause 20.2,

b. if the supplier fails to sign an agreement pursuant to ITB Clause 22,

c. if it is proved later that the supplier had committed substantial defect in implementation of the contract or had not substantially fulfilled his obligations under the contract or the completed work is not of the specified quality as per the contract ,

d. if convicted by a court of law in a criminal offence which disqualifies the supplier from participating in the contract.

21.2 A Supplier declared blacklisted and ineligible by the GON shall be ineligible to bid for a contract during the period of time determined by PPMO.

Section IV. Schedule of Requirements

1. (Delivery and Completion Schedule)

S.N.	Description of Works	Month					
		0.5	1	1.5	2	2.5	3
1	Mobilization						
2	Survey and PCS Report						
3	Design, Manufacturing and Supply						
4	Construction,Testing and Commissioning						

Note: The completion period shall start as of: the date of signing the contract.

Section V : Technical Specifications and Drawing

STAY SETS

1. Scope

This Specification covers the fabrication and supply of adjustable threaded, galvanized, ferrous, stay sets, stay insulator and nuts for use in overhead line construction.

2. Description

2.1 The stay set shall consist of mild steel; galvanized stay rod; stay insulator; stay tightener or adjustable head complete with stay plate a thimble of dimensions shown in the drawings in Construction Standards of the Bidding Document.

2.2 The stay rod shall be fabricated of mild steel of minimum tensile strength of 4200 kg/sq.cm. The other technical features and dimensions are given in Table 1 attached herewith.

2.3 The stay tightener shall be made of mild steel of minimum ultimate tensile strength of 4,200 kg/sq.cm. The thimbles shall be made of 1.219mm (18 SWG) GI sheet, and shall be suitable for terminating steel stay wire with a preformed grip.

2.4 The stay plate shall be square type MS plate of dimensions shown in the attached drawings and mentioned in Table 1. The plate shall have a matching hole at the center to fit the end of the stay rod.

2.5 The stay insulator shall be manufactured and tested in accordance with IS: 5300-1969 or equivalent national or international standard.

3. Fabrication

3.1 The stay rod and nut shall be fabricated to the shape and dimensions shown in Drawings attached with the Bidding Document.

3.2 The thread form at the threaded end of the rod, and that of the accompanying nut, shall be optional with the supplier. However, it shall be the responsibility of the Supplier to supply the stay rod with a thread form that shall sustain the rated loads specified in Table 1 without creep or stripping over the full life of the rod material at specified diameter.

3.3 After fabrication, the stay rod and nut shall be hot-dip zinc galvanized in accordance with IS 2629-1985, latest edition, or to an equivalent hot-dip galvanizing standard which produces equal or superior result.

3.4 After galvanizing, the nut and rod threading shall be such that the nut may be run the full length of the thread without the use of tools.

Table 1 : Ratings and Features

Length of stay rod	1.8 m (6')
Diameter of stay rod	16 mm
Ultimate tensile strength of stay rod and turn-buckle	4200 kg/sq.cm
Minimum breaking load	6,433 kg
Length of threaded portion	300mm
Thimble shape	Suitable for 7/12 SWG stay wire
Thimble section	18 SWG minimum.
Stay plate section	300x300x6 mm
Galvanization	IS: 2629-1985
Stay insulator	
Highest System Voltage	12 KV
Rated Voltage	11 KV
Cree page Distance (min)	41 mm
Minimum Failing Load	>40 KN

STRANDED STAY WIRE

1. Scope

1.1 This Specification covers the fabrication and supply of zinc-coated steel wire for use in overhead power line as stay wire ropes for line supports (poles).

2. Description of Strands

2.1 The steel strand shall be fabricated in accordance with B.S. 183 1972/ (1983) or an equivalent national or international standard. The wires shall be 45-ton quality fully galvanized by hot dip process to British Standards or equivalent.

2.2 The steel wire strand shall have a left-hand lay. The steel wires shall have no joint throughout the whole length. Strands shall be uniform and shall have no defects such as cracks, dust encapsulation or crevices. Further details are given in Table 2 herein.

3. Packing

3.1 The steel wire strand shall be furnished in reels. Each reel shall have a weather-resistant tag securely attached showing the length, nominal diameter, number of individual wires, grade of the strand, and the class of zinc coating.

Table 2 : Ratings and Features

Steel Wire Size (No. of wire/SWG)	7/12
Grade	700
Steel quality	45 ton
Diameter of Wires	2.64mm
Minimum Weight	300 kg/km
Zinc coating on steel Applicable Standard	According to B.S. 443(1982) B.S. 183 1972/(1983)

INSULATORS & HARDWARES

1. SHACKLE INSULATOR

1.1 The shackle insulator shall be manufactured and tested in accordance with IS: 1445-1977 or the latest version thereof or any other national or international standards that ensures at least equal or better quality to the standard mentioned above, will also be acceptable.

1.2 The shackle insulator shall have following ratings and features:

Type-B

- Highest System Voltage — 1 kV
- Rated Voltage — 500V
- Power Frequency Withstand Voltage, 1 minute
  - Dry — 23 kV
  - Wet — 10 kV
- Power Frequency Puncture Withstand Voltage, 1 minute : — 1.3×actual dry flashover voltage
- Leakage Distance (min) — 63mm

- Mechanical Strength	11.5kN
- IS Type	1

2. STAY INSULATOR

2.1 The Stay insulators shall be made of brown glazed high class porcelain as shown in the related drawing. The stay insulator shall be manufactured and tested in accordance with ISO as detailed in drawings. The stay insulator shall have following ratings and features:

Table 3

Rated Voltage KV	33	11
Highest system Voltage KV	36	12
Creepage distance mm (min mm)	57	41
Minimum Failing Load	>80kN	>40kN
Power Frequency Withstand Voltage, KV for 1 Minute		
Dry	27	18
Wet	13	8
IS Designation	C	A

Marking

- Each insulator shall be engraved or embossed to show the following:
  - a. Name or trademark of manufacturer.
  - b. Year of manufacture.
  - c. Contract No.
  - d. Minimum failing load in Newton (for pin and disc insulators only)
- Markings on porcelain shall be printed and shall be applied before firing.

2.2 The tension clamp shall be made of the aluminium alloy type. Other accessories like ball eye/ball clevis, socket eye, nuts, and bolts shall be made of hot rolled steel and obtained preferably by process of forging. Twisted cross arm strap shall be made of MS sheet metal. Cotter bolts and U-bolts shall be of galvanized steel. Cotter pins shall be stainless steel.

2.3 All forging and castings shall be of good finish and free from flaws and other defects. The edges on the outside of fittings, such as at the eye, socket and holes, shall be rounded.

Galvanizing

All ferrous fittings and the parts other than those of aluminumalloy and stainless steel, shall be hot dip galvanized in accordance with IS: 2629-1985 or any other equivalent national or international standards.

CROSSARMS AND BRACING ANGLES

1. Scope

This Specification covers the fabrication and supply of steel cross-arms and bracing members commonly used in overhead power line construction.

2. Material

2.1 The steel cross-arms shall be fabricated from hot-rolled channels and angles.

2.2 The steel channels and angles shall be fabricated and tested in accordance with Indian Standards IS: 226-1975 and IS-808-1964 or any revision thereof or other equivalent national or international standard provided that the resulting steel stock is of equal quality and strength. The minimum tensile strength of the steel shall be 4200 kg/cm2.

3. Description

3.1 The steel cross-arms and bracing angles shall be of sizes shown in the Table 1: Cross-arms and bracing angles, contained herein.

3.2 Conceptual hole pattern and size of holes on cross-arm channels are shown in appropriate drawings herein, however, the Supplier must confirm with the Project the locations and sizes of holes prior to the manufacture.

3.3 The surface of the steel shall be flat after drilling or (punching) and free of dimpling or imperfections. The hole edges shall be broken by reaming. The holes shall be full dimension after galvanizing and no minus tolerance of specified hole size will be accepted.

3.4 The steel cross-arm and bracing angles shall be furnished reasonably smooth on all surfaces and free of burrs or sharp projections.

Table 4 : STEEL CROSSARM CHANNELS AND ANGLE BRACES

S.no	Description	Type	Dimension in mm	Ref. Drg.
1	Triangular configuration 11, V,Single Pole			
	Pole Top	Channel	100×50×6.4×5×300	
	Standard	Channel	100×50×6.4×5×1200	
2	H - Pole Structure 11, kV:			
	2.1 Standard	Channel	100×50×6.4×5×2390	
	2.2 Bracing Member	Angle	40×40×5×2200	
	2.3 Bracing Member	Angle	40×40×5×1995	
3	Lightening Arrester and Cut-out Support (at transformer Platform)	Channel		
	5.1 Support		100×50×6.4×5×2800	

FLAT CROSSARM BRACE

1. Scope

This Specification covers the fabrication, testing and supply of flat, galvanized steel cross-arm braces, as per specification & drawing.

2. Material

2.1 The flat cross-arms brace shall be fabricated out of hot-rolled steel flat.

2.2 The steel flat for cross-arms brace shall be fabricated and tested in accordance with Indian Standards IS: 226-1975, and IS-1731-1971 or any revision thereof or other equivalent national or international standard provided that the resulting steel stock is of equal quality and strength. The minimum tensile strength of the steel shall be 4200 kg/cm^2.

3. Description

3.1 The brace shall be furnished reasonably smooth on all surfaces and free of burrs or sharp projections.

3.2 The surface of the steel shall be flat after drilling or (punching) and free of dimpling or imperfections. The hole edges shall be broken by reaming. The holes shall be full dimension after galvanizing and no minus tolerance of specified hole size will be accepted.

3.3 The brace shall have a minimum tensile strength of 3182 kg at the bolt-hole and bolt slot.

3.4 The brace shall be capable of being bent 10 degrees at the bolt hole or slot and 140 degrees at any point between hole and slot without cracking of the base metal on the outside of bent portion.

3.5 The brace shall be drilled and dimensioned in accordance with drawings And Construction Standards of the Bidding Document.

POLE CLAMPS

1. Scope

1.1 This Specification covers the fabrication and supply of galvanized steel pole clamps with nuts, bolts and washers for use on overhead power line construction.

2. Material

2.1 The pole clamp shall be fabricated out of hot-rolled steel flat.

2.2 The steel flat for pole clamp shall be fabricated and tested in accordance with Indian Standards IS: 226-1975, and IS-1731-1971 or any revision thereof or other equivalent national or international standard provided that the resulting steel stock is of equal quality and strength. The minimum tensile strength of the steel shall be 4200 kg/cm^2.

3. Description

3.1 Outline details of pole clamps are shown in the drawings, Construction Standards of the Bidding Document. Dimensions may be changed to comply with the final pole sizes selected. Therefore, the dimensions must be confirmed with the Project prior to manufacture.

3.2 Two (2) numbers of galvanized, 16 mm. (dia.) X 60mm. (length), fully threaded bolts with two (2) nuts and washers shall be provided with each pole clamp.

3.3 The fittings shall be free of burrs, splinters, splits, sharp points and edges, which may damage conductors or show evidence of poor workmanship.

3.4 The surface of the steel shall be flat after drilling or (punching) and free of dimpling or imperfections. The hole edges shall be broken by reaming. The holes shall be full dimension after galvanizing and no minus tolerance of specified hole size will be accepted.

3.5 The pole clamps shall have a minimum tensile strength of 3182 kg at the bolt-hole and bolt slot.

BOLTS, NUTS AND MISCELLANEOUS FASTENING COMPONENTS

1. Scope

This Specification covers the fabrication and supply of bolts and nuts, as specified herein, for use in overhead electric line construction.

2. Material

2.1 The bolts and nuts shall be manufactured and tested in accordance with IS: 1363 (Part I)-1984 or the latest version thereof or any other national or international standards that ensures at least equal or better quality to the standard mentioned above, will also be acceptable.

3. General

3.1 Bolts and nuts shall be furnished in the types, diameters and lengths specified in the Price Schedule. However, the dimensions and length of threading of bolt must be confirmed with the Project prior to manufacture.

3.2 Thread forms shall be consistent with all material/items listed herein and shall not strip or slip under sustained tensile loading equal to the design tensile strength of the threaded material item.

SHACKLE INSULATOR FITTINGS

1. SCOPE

1.1 This Specification covers the fabrication and supply of D-Iron type shackle insulator fittings, and shackle strap required for shackle insulators for use in overhead low voltage line construction.

2. GENERAL REQUIREMENTS

2.1 The shackle fittings shall be free of burrs, splinters, splits, sharp points and edges which may damage conductors or show evidence of poor workmanship. All ferrous fittings and parts other than stainless steel shall be galvanized as per IS:2629-1985 or equivalent national or international standard. The minimum coating thickness shall be not less than 85 micron.

3. OTHER REQUIREMENTS

3.1 D-Iron type shackle fittings shall consists of the following main components:

- Mild Steel D-Iron,
- 1 No. Mild Steel Bolt and Nut,
- 1 No. Spring Washer.

4. TESTS

4.1 The shackle fittings shall comply with the following tests as per IS: 7935 or equivalent national or international standard:

1. *Type Tests:*

   - Visual Examination,
   - Verification of Dimensions,

- Galvanising.

2. *Acceptance Tests:*

- Verification of Dimensions,

- Galvanising Tests.

3. *Routine Test:*

- Visual Examination Test.

ELECTRICAL WORKS

1. General

1.1 These specifications together with the Construction Standards shall govern the performance of the Works and shall be the basis for inspection and acceptance of the Works by the NEA.

1.2 These specifications and the Construction Standards shall be considered as mutually inclusive, and the conditions stated in each shall supplement the other as appropriate.

1.3 All these specifications shall be followed at all times by the Contractor unless specifically accepted in writing by the NEA, or unless some aspects of the work covered by these specifications are not required by the scope of work.

2. Route of Circuits

2.1 2.1 The line routes shown on line route drawings are provisional and subject to finalization by the Contractor. To the greatest extent practicable, all overhead circuits should be located along streets or traveled ways ordained by the Village Development Committee or required authority as public property, except as required for service drops and circuits to individual consumers.

2.2 To the greatest extent practicable, all facilities should be located on public property, and in no case shall private property be occupied unless specifically authorized by the NEA.

3. Surveys and Staking

3.1 All structures should be located at the outer limits of public property along streets or travelled ways. Structures should also be located along streets at property lines of adjacent private property. Structures and stays running parallel or perpendicular to the line route shall not block portions of streets, travelled ways, drives, passages, or gates.

3.2 All structures shall be so located as to reduce, to the greatest extent practicable, obstacles to pedestrian and vehicular traffic.

3.3 Where underground facilities are indicated by surface conditions, or where such facilities can be located, structures and stays shall be so located as to avoid conflict with such facilities during construction.

3.4 All structure and stay lead locations shall be staked. At points of intersection (PI) of tangent line sections, steel rebar stakes shall be used to locate the PI. A minimum of two (2) side sightings will be made at each PI to permit re-location of PI in the event of stake removal. All structure locations in tangent line sections shall be staked.

3.5 All distances between structures, and other necessary measurements of length, shall be measured to accuracy of 0.1 meter and all angles shall be determined by transit to an accuracy of 0.1 decimal degree. All elevations shall be measured to an accuracy of 0.1 meter by means acceptable to the NEA.

3.6 All measuring and staking activity shall be accomplished by personnel with experience in survey procedures; and standard survey equipment acceptable to the NEA, shall be used to perform the survey work. Field survey notes covering all survey work shall be produced and maintained and shall be returned to the NEA at the time of submission of final PCS report. The format of proposed survey notes shall be submitted to the NEA for approval.

3.7 Survey work shall include centerline and structure location and staking; determination of overhead and side clearings of other structures, wires, and obstacles; area surveys and plotting; and centerline profiles of terrain; as directed by the NEA.

4. Technical Documentation

4.1 All technical documentation as specified herein shall be prepared by the Contractor. The Contractor shall employ skilled drafting personnel to produce all documentation specified. All technical documentation prepared by the Contractor shall be subject to the approval of the NEA prior to acceptance by the NEA of such documentation. All technical documentation shall be prepared in the English language.

4.2 Documentation shall be prepared using the following mediums:

(a) A4 Size of paper shall be used to produce the base Structure Data Sheet (SDS) and A1 size of drawing papers for As-Built Drawings and other drawings specified by the NEA. The scale for drawing shall be 1:5000.

A1 594 mm x 841 mm	(23.39" x 33.11")
A4 210 mm x 297 mm	(8.27" x 11.69")

(b) Computerized geographical information system shall be used to produce small area plotting, profiles of line-sections and centerline plotting necessary for the development of SDS and As-Built Drawings.

(c) A set of digitized data on CD shall be submitted separately.

4.3 SDS shall be prepared as specified in, *Preamble to Price Schedules* by the Contractor showing his proposed construction details for erection of facilities in accordance with the Construction

Standards. The SDS shall be prepared after the centerline survey and staking is completed, for any line section designated by NEA, and shall be submitted to NEA for approval prior to any construction of the facilities shown in SDS. Submission of SDS for approval shall be in A4 size paper.

NEA may require any revisions to be made, at their sole discretion, prior to approval of the SDS for construction. An approved and field checked SDS is required for all Construction Units invoiced by the Contractor. The Contractor and NEA representative shall perform Field checking of the SDS jointly. The SDS and As Built Plan are intended as permanent records for NEA. Any construction performed prior to the Contractor's receipt of approved SDS from NEA shall be completely at the Contractor's risk, and NEA shall have the right to require any correction due to the un-approved construction activities.

4.4 As-Built Drawings shall be prepared by the Contractor in the general format provided by the NEA. Drawing size shall be approximately 841 x 594 mm overall and the scale shall be 1:5000. The NEA shall provide any available environmental background data for inclusion on the various drawings and the Contractor shall record (in ink) all facilities As Built.

4.5 The Contractor shall prepare other technical drawings, in the same medium and format as the As-Built Drawings, for example As-Built Drawings index sheets, pole maps, and one line diagrams as specified and required by the NEA.

4.6 The Contractor shall prepare and furnish Transformer Record documents, in the format specified by the NEA, for each transformer installed.

5. Material Storage

5.1 The Contractor shall be responsible for storage of all materials and equipment delivered by him for the work; and security of materials. The Contractor shall manage all labor, equipment, and vehicles to load and transport said materials and equipment to the worksites.

5.2 Worksite

(a) Extended storage of materials along the routes of lines will not be permitted.

(b) Conductor reels may be spotted at the worksites for a short period prior to installation provided that crating and reel lagging are intact to protect the items. Poles may be spotted at structure locations for short periods prior to setting.

(c) All poles, and conductor placed at the worksites shall be located so that the items are not subject to damage and do not impede pedestrian or vehicular traffic.

(d) Any damage caused by imprudent placement of equipment and materials by the Contractor at the worksites shall be corrected by the Contractor, in a manner acceptable to the NEA, at the Contractor's cost.

5.3 Contractor's Storage Facility

The Contractor shall be financially responsible for the secure and proper storage of materials, prior to installation of the materials and equipment, to prevent loss or damage to any materials.

However Contractor may use NEA sub-stations premises subject to approval of concern NEA/Substation Authorities.

6. Poles and Cross Arms

6.1 Pole Numbering

Poles and structures shall be numbered in accordance with a numbering system provided by NEA. Each pole shall be marked permanently through template with the assigned number.

6.2 Pole Framing

Pole and structures shall generally be framed in accordance with Construction Standards and the construction SDS. Where special framing requirements are necessary, the Site Engineer or Engineer shall provide framing instructions for the specific structure. Each cross-arm shall be attached to the pole by a pole clamp or by machined bolts of sufficient length to pass completely through the holes provided on the pole and cross-arms and receive their full complement of nuts. Bolts of proper length shall be used. Excess nuts shall not be used to make use of a bolt, which would otherwise be too long. The end of a machined bolt projecting more than 3 centimeters beyond the nut shall be cut off to a length of 2 centimeters beyond the nut. Each bolt, when installed, shall have its full complement of nuts.

Washers shall be used where specified in these standards. For wooden pole, bolted connection through wood members should be drawn tight to allow for shrinkage of wood. Bolts should be pulled up so that the wood is compressed but not so tight to break the wood fibers. Fiber breaks on the surface of the pole increases probability of decay.

During the erection work at the field there may be necessity to modify galvanized steel hardware and may have to be drilled, reamed, filed or cut. Under such a condition the area of the steel exposed, after these modifications, shall be coated with a zinc-rich paint to protect the steel from corrosion.

6.3 Excavation

All excavations made for the installation, or demolition, of facilities shall be accomplished in a timely manner according to the scheduled installation. Required excavations shall be opened, material installed, and backfill placed, as specified, in a continuing operation to the greatest extent practicable.

Any excavation left open during discontinuous construction, which is accessible to the public or along public thoroughfare, shall be covered or barricaded, and marked by suitable visual means, to prevent a public hazard.

Excavations shall be properly located and sized for the intended use. Pole and stay plate/ anchor excavations shall be correctly sized to retain undisturbed soil to the greatest extent consistent with the means of excavation. Pole holes shall be made by power-driven auger or by manual methods; power-driven shovel equipment shall not be used. Pole holes shall be excavated to the specified depth with no tolerance shallow and tolerance of ten (10) centimeters deep. The bottom of pole holes shall be undisturbed soil, gravel or rock. Stay plate holes shall be excavated by manual methods to specified depth with no disturbed soil in the direction of the anchor rod.

All excavations shall be backfilled with excavated material, or as specified for the installation. Backfill shall be free of foreign materials and shall be well tamped with excess backfill graded over the excavated area to prevent depressions resulting from eventual natural compaction. The Contractor if so directed by NEA shall remove large amounts of excess backfill from the site. If so directed by NEA, the Contractor shall provide suitable backfill materials for excavations where existing removed materials is insufficient, or inappropriate, to provide suitable grading of the excavated area.

6.4 Pole Setting

Poles shall be set in accordance with the appropriate Sections of the Construction Standards. Each pole shall be assigned a unique construction number at the time of structure staking for preliminary identification and preparation of SDS. Pole holes shall be dug large enough in diameter to admit a tamping bar all around the periphery of the pole and shall have a uniform dimension as per the type of pole used at the top and bottom.

Poles shall be planted in the ground to the depth specified in construction. Drawings before planting a pole, the bottom of the hole made for planting the pole, shall be cleaned of free soil and firmly tamped, to prevent the hole from settling.

The stability of a pole, particularly a pole without stay, is greatly influenced by the size of the pole hole, the nature of the soil and the care exercised in back filling and tamping. Two active hand tampers and one slow shovel shall result in good compaction.

Poles shall be set to stand perpendicular except at terminals, angles and other points of excessive strain where they shall be given a rake not to exceed 10 centimeters against the direction of strain. Poles located at the sides of banks or other locations, where washouts may

occur, shall be protected by suitable cribbing, or shall be referred to the Engineer for recommended action.

After the pole is in position and the hole is back filled and tamped, soil shall be piled and packed firmly around the pole. Pole setting shall be inspected prior to acceptance and any back fills that have sunk shall be refilled.

Where it is necessary to set poles at locations where the soil has very low bearing value, or in

swampy conditions, a pole may be fitted with a bog shoe in accordance with construction drawings the engineer may specify that type of construction.

Poles located in shallow riverbeds shall be protected by gabions as designated by the Site Engineer or Engineer. Gabions should be approximately 2 meters x 1 meter x 1 meter. Four such gabions are required for each pole.

Set pole and pour 860 mm diameter foundation as per construction standard construction drawing. Level areas around pole and set gabions in pattern shown in construction drawing. It is important to lace adjacent gabions together along the perimeter of all contact surfaces. Fill gabions with hard, durable, clean stone, 100 mm to 200 mm in size in three layers. Install two void between pole and gabion with hard, durable, clean rock 200 mm minimum size.

7. Stays

7.1 Stay leads specified in construction documents are defined as the horizontal distance from the centerline of the pole at ground line to the point where the anchor rod should enter the ground assuming the ground to be level. For the correction in stay leads for uneven ground see construction drawing.

7.2 The Engineer, upon request, may designate the actual location of stay anchor rods on slope of hills. The stay stake indicates the point where the anchor rod enters the ground. The anchor hole shall be dug accordingly.

7.3 The attachment of one stay shall not overlap that of another stay when 2 or more stays are carried to a pole or anchor. Each shall be entirely independent of the other. This does not prevent the use of multiple eye rods for nuts designed for such use.

7.4 All stays to be installed on a pole line shall be placed and drawn reasonably taut before the conductors are tensioned. After the conductors are tensioned and sagged to their final position, the stays shall be carefully inspected to see that each is carrying its share of the load on the pole as intended. If multiple stays are not carrying equal strain, the slack stay shall be pulled up until it is sharing load as intended.

7.5 Stay anchors must be installed full depth and set to pull against undisturbed soil to develop full tension. An anchor not properly installed will move and allow movement of the top of the pole, thus slacking the conductors. Stay anchors installed in soft or unstable earth shall be placed at specified depth and back filled with 5 cm. maximum size crushed stone placed to a depth of 1 meter from the bottom of the pole.

7.6 Installation of Stays

- Where stays are installed on a line angle structure, line of stay shall bisect the outside line angle. The span of stay extending between poles shall not be greater than 60 meter. Anchor and anchor rods shall be set so that the axis of the rod and line of stay shall be

straight. The portion of the anchor rod above the ground shall not be bent at an angle to connect a stay wire. If this occurs, anchor and anchor rod shall be reset. The anchor rod shall not be exposed for more than 15 centimeters above the ground after the anchor is set.

- If gravel back fill is required to set anchor in soft or unstable soil, as per construction drawing, the Contractor will have to carry out the gravel back fill as directed by Engineer.

- If a stay is installed on a pole where low voltage conductor is dead ended or double dead ended and extends past stay, a piece of plastic hose slit along the length shall be placed over the stay wire extending from the upper stay attachment to 200 mm below lowest low voltage conductor. After installation, the hose shall be wrapped with plastic tape and the hose shall be secured to the upper stay bolt with tie wire.

7.7 Stay Insulators

Stay insulators shall be installed on all stays in accordance with the construction drawings.

8. Conductor

Aluminum Conductor Steel Reinforced (ACSR) conductor shall be used for 33,11,0.4/0.23 kV overhead lines.

8.1 Sagging

Conductors shall be sagged in accordance with the sag chart specified by these specifications. The importance of careful sagging of conductors cannot be over emphasized. Conductors have definite characteristic that control their behavior resulting from changes of temperature, wind speed and additional load due to ice or wet snow.

Conductors must not be sagged too tightly (less than specified sag) as unspecified extra tensions may result in failure of conductor structure.

Conductors sagged too loosely (more than specified sag) may contact adjacent conductors hardware or any structure. Excess sag can reduce clearance beneath the line with the ground to the point of danger.

8.2 Sag Charts

Unless otherwise noted, all sag charts are calculated on the basis of 35 kg/m2 wind pressure. Sag is always measured vertically, without wind, when conductors are being installed or resagged. Unless otherwise specified by the Site Engineer or Engineer for a specific condition, initial or stringing sag shall be applied to the installation of all new unstressed conductors. The initial sag is always less than the final sag. The most practical method of obtaining the correct sag is by sighting between two adjacent structures. Choose the structure, which is reasonably near the same elevation Sags for the various temperatures shall be furnished by the Engineer in a table form for spans not covered by the sag chart.

In order to ascertain the sag for a given stringing temperature, select the point corresponding to the proper temperature on the scale on the left-hand side of the sag chart. Lay a straight edge so that it passes through this point and the point of the center scale representing the length of span to be sagged. The straight edge will then indicate the proper stringing sag on the right-hand scale. Interpolate if the temperature of span is not exactly the same as designated on the chart. The low voltage neutral conductor shall be sagged with the same sag as the low voltage phase conductor.

If the low voltage conductor, as a group, has less design sag than the high voltage phase conductor installed above it, the low voltage conductor, as a group, shall be installed to the same sag as the high voltage conductors installed above. The sag of pre stressed conductors such as installed with a tensioning machine shall be specified by the Engineer for the job.

8.3 Stringing

- All cable grip used for the installation of conductors shall be of the type designed to prevent injury to the conductor.
- Attach targets to each structure at a distance below each point of the support of conductor equal to the required sag. Sight from one target to the other. The line of sight between targets may be horizontal or inclined. Draw the conductor up to the proper sag, which will be reached when its lowest point will be in line with the target. Where terrain and / or length of span in such that the targets would fall below the ground line, the difference in elevation between the lower conductor attachment and the lowest point of sag, sag below lowest support will be furnished by the engineer in the tabular form.
- The dynamometers and similar apparatus shall be used for tensioning of conductor to obtain appropriate sagging of conductors. Dynamometer shall be used only when the sight method is not feasible. Dynamometer shall be checked for accuracy before using.
- For stringing of ACSR conductors of all sizes, stringing rollers or roller shall be used to support the conductor as it is pulled out and sagged. Stringing rollers shall be used regardless of size of aluminum conductors, bare or covered.
- Stringing rollers shall be suspended at each insulator support position so that the conductor shall roll smoothly over the roller-protecting conductor from any physical damage.
- Stringing sheaves shall have a diameter at least 20 times the conductor diameter and so finished as to prevent damage of any kind to the conductor as it is pulled through the sheaves.
- Conductor drum shall be located at a sufficient distance from the first structure to avoid excessive bending of the conductor over the sheaves and excessive downward loading on the cross-arms.

- Attention shall be paid to the fact that all sag charts contained herein for ACSR conductors are calculated on the basis of non pre-stressed conductor. For this reason, at no time during the stringing or sagging operation, shall conductors of this type be pulled to sag, which are less than those shown by the charts.

- Special care shall be taken at all times to prevent the conductor from becoming kinked, twisted or abraded in any manner. Where it is necessary to drag conductors on the ground, the conductors shall be protected by covering all stones or other objects, which might damage the conductor with ACSR conductor is being handled on river crossing spans. Floats with rollers shall be used to prevent the conductor from dragging along the river bottom. In stringing conductors across highways, the conductors shall be fully protected from passing vehicles by use of temporary guard structures.

8.4 Damaged Conductor

Damaged conductors shall be repaired by using a repair sleeve provided that no more than 2 strands of the outer aluminum layer are damaged and further provided that none of the sleeve core strands are damaged. For a conductor damaged in excess of the above conditions, the damaged section of the conductor shall be cut out and a tension splice installed. When cutting out damaged section of conductor, no more than 1 tension splice shall be permitted in a span and no splice is made within 8 meters of an insulator attachment.

8.5 Sag Error

Sag error shall not exceed ± 40 mm from the sag defined by the sag chart.

8.6 Conductor Attachment

- Conductors shall be secured to pin insulators with pre-formed conductor ties or with tie wire.

- Insulator ties, except at jumper supports in structures, shall be made with pre-formed ties when available. Conductors shall be connected to dead end assemblies with tension set.

8.7 Line Splices for Tensioning and Looping

Cleaned and polished contact surfaces are necessary to make conductor splices so that it shall remain free from trouble. Great care shall be taken to completely clean the strands of aluminum conductor. The splicing sleeve must be centered over the conductor ends before compressing to make a splice of required strength. Appropriate sleeve shall be used for splicing ACSR conductors prior to installation. The outer strands of aluminum shall be carefully cleaned with a wire brush to remove all foreign matter till the aluminum shines brightly. The cleaning applies to both new and old conductors. The manufacturer pre-filled with inhibitor compound supplies splicing sleeves for aluminum conductor. Splices in line conductors shall be so located that the end of the splicing sleeve is at least 30 cm from

the end of a suspension or dead end clamp. Non-tension loops, such as between dead ends, shall be spliced with a connector when the conductors are of same metal and size.

8.8 Connectors

- Cleaned and polished contact surfaces are necessary to make electrical connections that will be free from trouble. Tap connectors are supplied by manufacturers pre-filled with inhibitor compound. Excess inhibitor compound shall not to be removed but it shall be wiped over the connector as a moisture seal. Connectors shall not be covered or taped.

- Compression connectors shall be located in such a manner that there shall be at least 30 cm of conductor between the end of the connector and the end of a dead end Connectors shall be installed on non-tensioned portion of the conductor such as loops in preference to the conductor in the span.

- Connectors installed on conductor shall be located in a span adjacent to the crossing rather than the crossing span when practicable.

- Aluminum compression connectors, pre-filled with inhibitor compound, shall be compressed on the cleaned area of aluminum conductor. Where necessary, inhibitor compound shall be applied to the cleaned conductor and connector before assembly.

- Aluminum compression connectors shall be used for connecting aluminium-to-aluminium conductors.

8.9 Conductor Accessories

Pre-Formed Ties and Grips

Taps for jumpers and services shall not be made over the legs of ties or dead end grips.

Pin Insulator Ties

Pin insulator ties are of 2 types:

a. With single top grooves: Single top ties may be used to turn line angles to 7 degrees where single insulators are permitted. Please refer construction drawing for specific applications.

b. With side grooves with specific size of ties for specific conductor in each tie style: Specific usage is dictated by insulator pin loading and use of single insulators as specified in construction drawing.

Shackle Insulator Ties

Shackle insulator ties are furnished in one type with specific size of ties for specific conductor. Shackle ties may be used to turn line angles at 20 degree. At the line angles, the conductor shall be located on

the side of the vertically installed shackle insulator that causes the conductor to be forced against the shackle insulator. Angle loading shall not be imposed on the ties itself.

Preformed Stay Wire Binder

- Preformed stay wire binder for stay wire are furnished as per construction drawing. Preformed stay wire binder are right hand lay. Preformed stay wire binder may be removed and replaced up to 3 times, when initially installed, to permit adjustment of stay tension. When applying ties or grips the manufacturer's identification tag and colour coding shall be checked to insure that the tie or grip is the right unit specified for application on the specific conductor or wire strand.

- Perform for stay wire are furnished with 2 crossover markings. When applying preform on hardware, the grip shall be installed using the crossover point closest to the loop of the grip.

Compression Fittings

Full-tension conductor splices and repair sleeves are furnished for all conductors to be installed.

a. Full Tension Conductor Splice

Full-tension spliced for ACSR conductor is provided in a 2/1-piece unit. Full tension conductor splices will develop full conductivity of the conductor and a minimum of 95% of the rated conductor breaking strength. Please see construction drawing for splicing instructions.

b. Repair Sleeves

Conductor repair sleeves are furnished for all conductors to be used to restore the rated current carrying capacity of conductors with broken strands. Repair splices have no tension rating.

8.10 PG Clamps

PG clamps are furnished in a full range of sizes for application in the non-tension connection in 33, 11 kV circuits. The PG clamps are designed for general use in making tap and jumper connections of various types. In all applications of PG clamp fittings, the conductor metal shall be wire-brushed to a bright condition to remove surface oxidation on the conductor.

8.11 Application

When applying ties or grips the manufacturer's identification tag and colour coding shall be checked to insure that the tie or grip is the right unit specified for application on the specific conductor or wire strand. Preformed for stay wire are furnished with 2 crossover markings. When applying preformed on hardware, the grip shall be installed using the crossover point closest to the loop of the grip. In all applications of PG clamp fittings, the conductor metal shall be wire-brushed to a bright condition to remove surface oxidation on the conductor.

8.12 Line Construction

Arrangement of Conductor

The standard position of 11 kV phase conductors on the cross-arm in the normal triangular/horizontal configuration looking from the normal source of power supply shall be seen as:

Red (R) on top of the pole, Yellow (Y) on right hand end of the cross-arm and Blue (B) on left hand end of the cross arm.

Attachments to Poles

Boltholes are provided on poles for cross-arms, cross-arm braces and stay bolts.

Conductor Ties

Pre-formed ties and grips shall be used for attaching conductors to structures when available. If pre-formed materials are not available, the wire shall be soft conductor so that when made up, the tie wire will bind the conductor tightly. No tie wire shall be used for a second time. Tie wire shall be of the same metal as that of the bare conductor to which the tie is applied.

Conductor Support

- The conductor supports on straight lines shall be carried on the top wire groove of the pin insulator. Conductors shall be attached to the side conductor groove of pin insulator on the outside of angles so that transverse conductor tension will tend to hold the conductor in the insulator groove.

- Conductor ties shall not hold a conductor on the insulator when uplift exists. If uplift is found, it is required to consult with the Site Engineer or the Engineer to determine remedial action to be taken.

8.13 Pole Wiring

All taps or connections passing from one level to another on the pole shall, as far as possible, be vertical. Connections shall have sufficient length so that the line conductors are not moved from normal positions and normal movement is not restricted. Connections shall have at least 30 centimeters clearance from other conductors. Any connection carried from one side of the pole to the other side shall be supported on pin insulators.

9. Installation Criteria

9.1 The line alignment should be as straight as possible to minimize requirements for stays.

The basic span shall be maintained within the following limits:- 11 KV line: 50 m

9.2 The entire construction works shall be performed as per the construction units specified. Whenever the construction unit does not cover any specific activity, the Contractor and the Employee shall mutually settle the cost as per the man-hour involvement for the same and according to the labor rate quoted by the Contractor in his Bid.

9.3 Detailed schedules of material to be used are provided in each structure drawing of the construction standards. It shall be the responsibility of the Contractor to judge the appropriateness of the listed material according to the site conditions. If there is any need for addition/reduction or deviation from the listed material size/quantity, the Contractor shall ask the Employee for the approval of the same.

9.4 All types of line clearances shall be maintained as per the construction standards provided to the Contractor. Deviations from the standards may be allowed only for unique or special conditions.

9.5 Safety rules of the NEA shall be strictly observed at all times by the Employee and the Contractor and their personnel. Special care shall be taken to maintain the optimum conductor sag to provide adequate safety to the construction and the property or people.

9.6 All fastenings (e.g. preforms, nut bolts, stays and the like) shall be so installed that the constructed line components shall not fail to remain within the safety margin while maximum working load is applied. If the Contractor requires clarification of any construction standard or unit or he feels any doubt in his interpretation of construction activities he should clarify the points with the Employee in writing and the decision thus made shall be valid for further work.In the case where the break angle exceeds the above values the Contractor shall make dead end at the angle structure and use disc insulator fittings.

10. Installation Criteria

10.1 10.1 The line alignment should be as straight as possible to minimize requirements for stays.

The basic span shall be maintained within the following limits:-

33 kV line: 50m to 55 m

11 kV line: 50m to 55 m

Low voltage and composite line:

S.N.	No. of wire	Span in meter
1	4 wire	35-40
2	3 wire	40-45
3	2 wire	45-50

10.2 The entire construction works shall be performed as per the construction units specified. Whenever the construction unit does not cover any specific activity, the Contractor and the NEA shall mutually settle the cost as per the man-hour involvement for the same and according to the labor rate quoted by the Contractor in his Bid.

10.3 Detailed schedules of material to be used are provided in each structure drawing of the construction standards. It shall be the responsibility of the Contractor to judge the appropriateness of the listed material according to the site conditions. If there is any need for addition/reduction or deviation from the listed material size/quantity, the Contractor shall ask the NEA for the approval of the same.

10.4 All types of line clearances shall be maintained as per the construction standards provided to the Contractor. Deviations from the standards may be allowed only for unique or special conditions.

10.5 Safety rules of the NEA shall be strictly observed at all times by the NEA and the Contractor and their personnel. Special care shall be taken to maintain the optimum conductor sag to provide adequate safety to the construction and the property or people.

10.6 All fastenings (e.g. preforms, nut bolts, stays and the like) shall be so installed that the constructed line components shall not fail to remain within the safety margin while maximum working load is applied.

10.7 If the Contractor requires clarification of any construction standard or unit or he feels any doubt in his interpretation of construction activities he should clarify the points with the NEA in writing and the decision thus made shall be valid for further work.

10.8 HV Insulators: The Contractor shall use HV pin insulators in the alignment of the line where the break angle does not exceed the limits provided hereafter,

Table 5

S.N.	Conductor size in mm2	Minimum break angles in degree
1	100 (Dog)	7
2	50 (Rabbit)	15.5
3	30 (Weasel)	24.5

In the case where the break angle exceeds the above values the Contractor shall make dead end at the angle structure and use disc insulator fittings.

11. Installation of Stays

11.1 The Contractor, in general, shall install at least one stay for the supports in the following cases

(a) Dead end structure

(b) Tee-off (Tap) structure

11.2 11.2 Stay may not be installed in the following conditions

HV Line (33, 11 kV) with 11 m Pole

a) Conductor 3x100 mm2

- Span 75 m (max)
- Break angle: 4 deg.

b) Conductor 3x50 mm 2

- Span 75 m (max)
- Break angle: 5.5 deg.

c) Conductor 3x30 mm 2

- Span 75 m (max)
- Break angle: 6.5 deg.

Composite (HV +LV) line with 11 m pole

a) Conductor 3x100 mm 2 HV; 3x50 mm 2+30 mm 2 LV

- Span 40 m (max)
- Break angle : 2 deg.

b) Conductor 3x50 mm 2 HV; 3x30 mm 2+1x30 mm 2 LV

- Span 50 m (max)
- Break angle: 2.5 deg.

For conditions different from the above, the Contractor shall provide calculations showing the number of stays necessary and get approval from NEA prior to installation.

12. Transformer Structures

Distribution panel-board material and equipment ratings shall be determined by the kVA rating of the transformer and number of 400/230 volt out going distribution circuits. Where out going distribution circuits are installed, pole moment loading must be balanced by another out going distribution circuits in the opposite direction or by installation of stays.

Two separate rods shall be used to earth the transformer structure

a) One for surge arresters and equipment

b) Another for the neutral of transformer low voltage winding, body of transformer and the body of MCCB box.

- Each earth rod shall be driven at a minimum distance of 2 meters from the adjacent pole resulting in a minimum distance of 6 meters between the two ground rods.
- Ground conductor lead shall be stranded steel wire. 1/2" banding material shall be used to strap grounding conductors to pole(s) at one (1) meter intervals.
- Compression connectors and PG clamp shall be used to make all electrical connections. When connecting copper transformer circuit conductor to the secondary line conductors, the copper conductor shall be placed below the aluminium conductor at the connection so that rainwater will flow from the aluminum conductor onto the copper conductor.
- Conductor shall be terminated on main breaker and neutral bus with cable socket of proper size. Individual conductors of the circuits located in panel boards shall be bundled with cotton or nylon cord and trained and tied to conductor standoff clips.

13. Grounding Procedure

13.1 Purpose

Grounding conductors and electrodes (ground rods) are installed on poles and structures to provide a low impedance path to ground for fault currents and over voltages and current waves initiated by lightning strokes. The objective is to minimize possible difference in potential between normally non-current carrying parts and from those parts to ground. It is also necessary to provide a current path to ground to enable protective devices to quickly de energize the circuit under over voltages and over current conditions.

13.2 Parts to be grounded

The following parts shall be grounded

a) Surge arrester ground studs

b) Normally non-current carrying parts of the switches, frames, panel boards, cabinets, re closer tanks etc.

c) Low voltage neutral points of the transformer.

d) Neutral for the low voltage (0.4/0.23 kV) line shall be grounded at every 15 poles.

13.3 13.3 Grounding Conductors

Conductor sizes for grounding of specific parts shall be made as follows.

- Surge Arrestor 2AWG copper welded
- Switch frames and re closers 2 AWG copper welded
- Transformer neutral points 25 sq mm copper wires

All the grounding conductors shall be installed with the high-density polythene pipe at least above reach of the human beings.

13.4 Ground Rod Installation

At switches, re closers grounding points the ground rod shall be installed in the ground at a minimum lateral distance of two meter from the associated poles. The top of the ground rod shall be driven to a minimum depth of 40 centimetres below grade before connecting the ground conductor to the ground rod. At the transformer structure body of the transformer and the body of surge arrestor, MCCB box, the grounds shall be separated laterally from transformer secondary neutral point grounds by a minimum of 6 meters. Ground rods shall be driven to a minimum depth of 40 centimetres below grade before connecting the grounding Conductor to the ground rod.

The grounding conductor shall be encased in a rigid plastic pipe for a distance of 3 meters above the top of the concrete pole foundation or collar. The plastic pipe shall be of sufficient internal diameter to contain the grounding conductor.

14. 400/230 Volt Low Voltage Circuits

General Instructions

14.1 General

Bare wire 400/230 Volt circuits shall be supported on shackle insulator with D-iron. Generally, shackle insulator with D-iron shall be placed on the same side of the pole throughout the length of the line. Care shall be taken to see that shackle insulator with D- iron shall be mounted on that side of the pole from where most of the house service connection shall be extended. Spacing between two conductors for low voltage circuit shall be 305 mm.The three low voltage phase conductor shall be located in descending order from the top of the pole with Red (R) on the top, Yellow (Y) below Red and Blue (B) below Yellow. The low voltage neutral conductor shall occupy the bottom position.

14.2 Neutral Conductor

Neutral conductor may be the same size as the phase conductor or be sized smaller than the phase conductors. The neutral conductor size shall be specified by the work plan. All neutral conductors shall be bare ACSR.

14.3 Phase Conductor

Phase conductors shall be bare ACSR conductor as specified by the work plan.

15. Tree Cutting and Trimming

15.1 Any tree cutting or tree trimming shall be accomplished by the Contractor in coordination with CBO.

15.2 All cutting shall be removed by the Contractor with disposition of cutting as specified by NEA.

16. Interruptions to Existing Service

16.1 The Contractor shall arrange for interruptions of service to existing lines with NEA. Every effort shall be made to limit such interruptions to the minimum.

16.2 If it is possible to maintain service to a section of line by constructing temporary facilities approved by NEA, the Contractor shall detail man hours and classification of personnel required to construct such facilities and submit to NEA for approval prior to any work being performed. Payment for approved work shall be based on the rates covered in Preamble to Price Schedules.

DRAWINGS

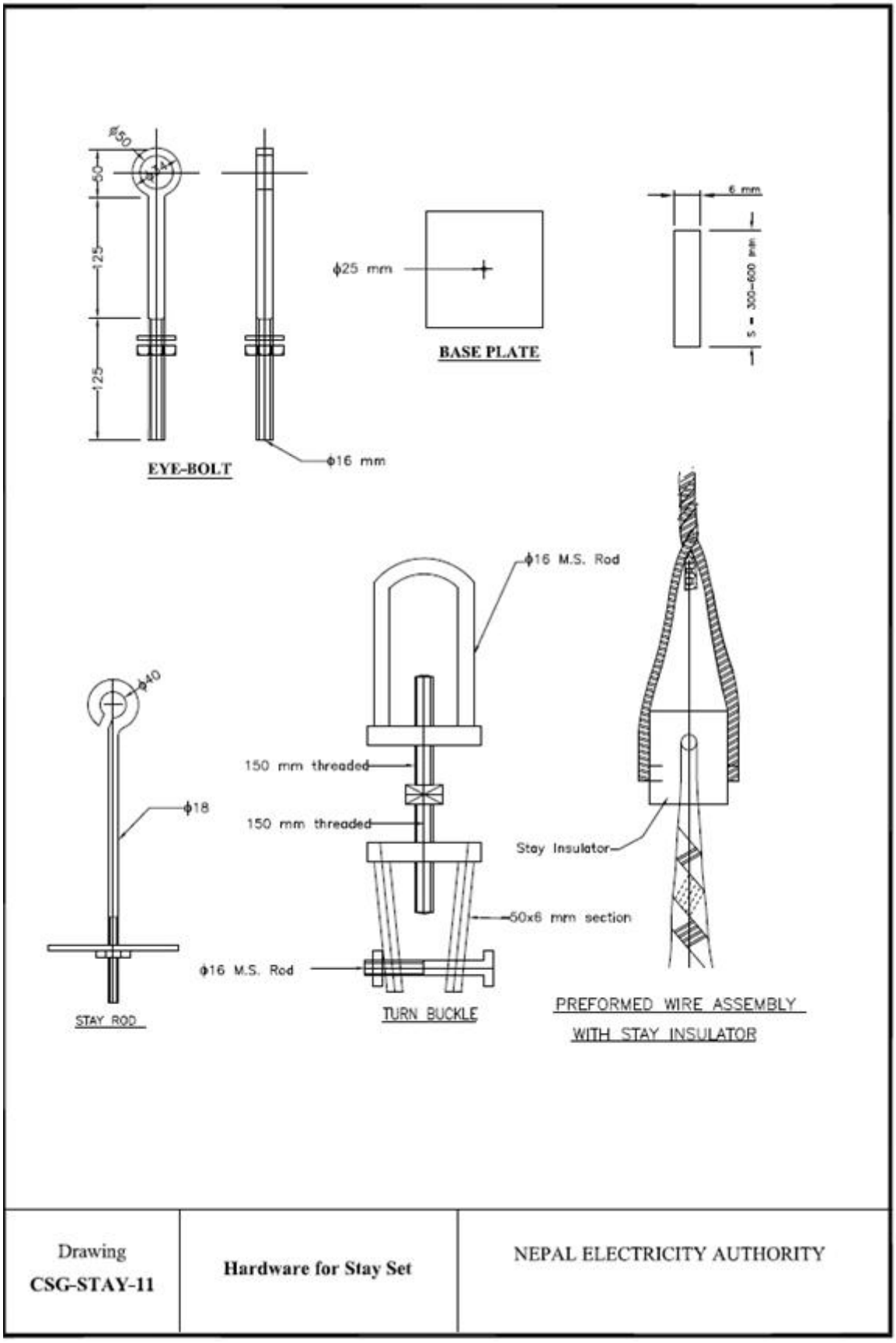

Drawing CSG-STAY-11	Hardware for Stay Set	NEPAL ELECTRICITY AUTHORITY

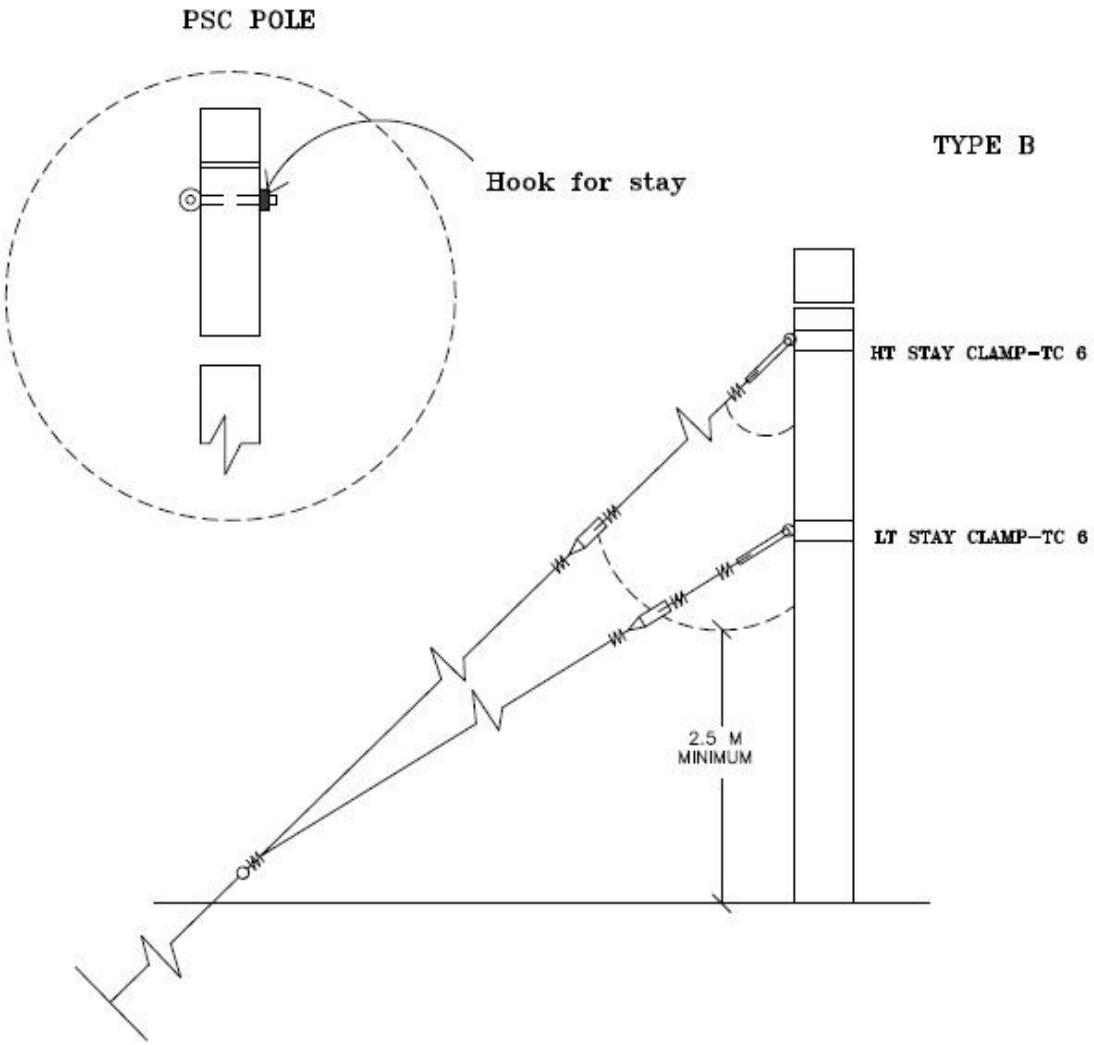

NOTE:
STAY ROD EYE SHALL NOT EXTEND ABOVE SOIL MORE THAN 150mm.

Drawing	Stays and Anchors	NEPAL ELECTRICITY AUTHORITY
CSG-STAY-03	**HT and LT Stay - Type B**	**Community Rural Electrification Department**

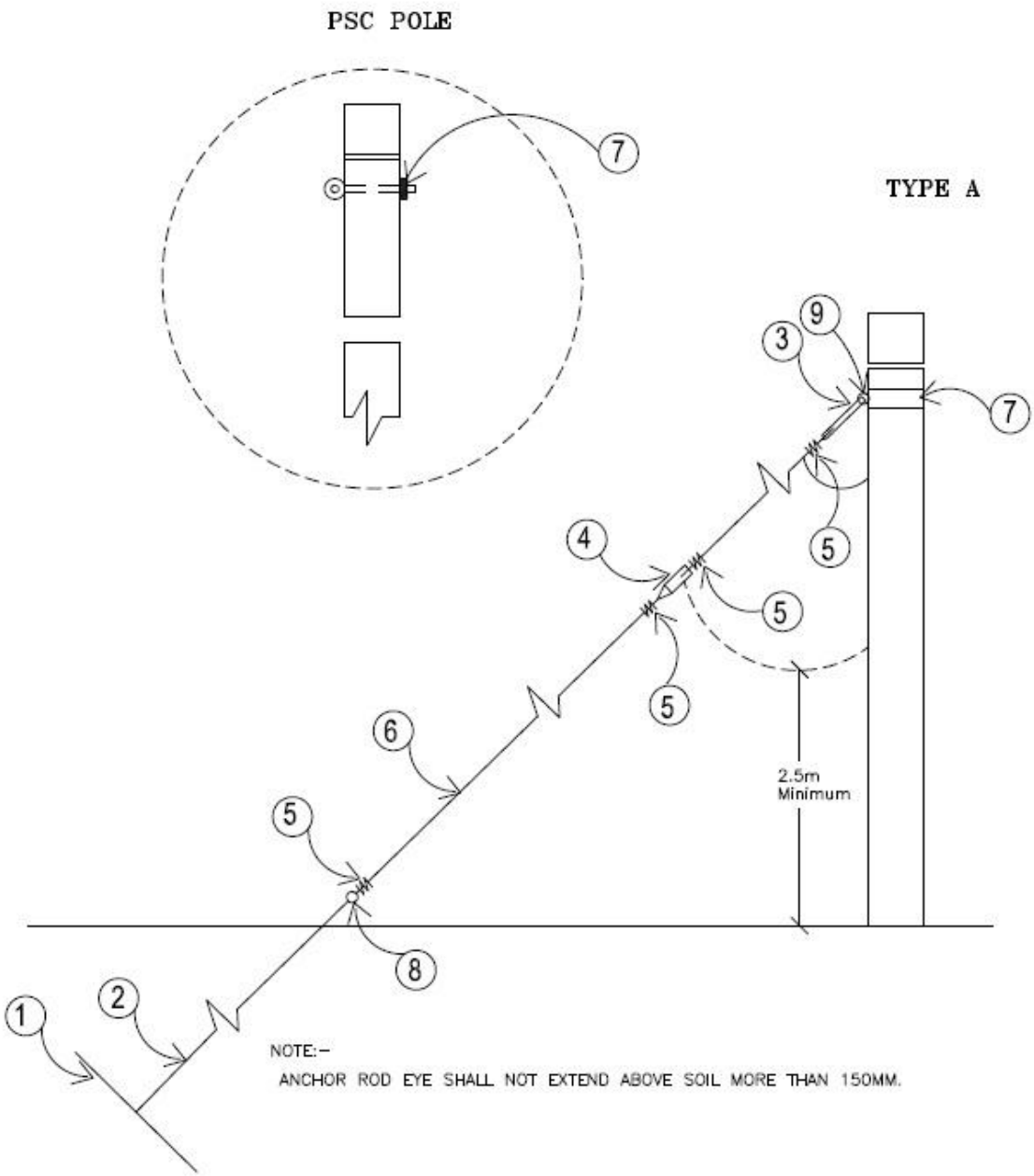

Drawing	Stays and Anchors	NEPAL ELECTRICITY AUTHORITY
CSG-STAY-02	**HT and LT Stay - Type A**	**Community Rural Electrification Department**

SAG CHART

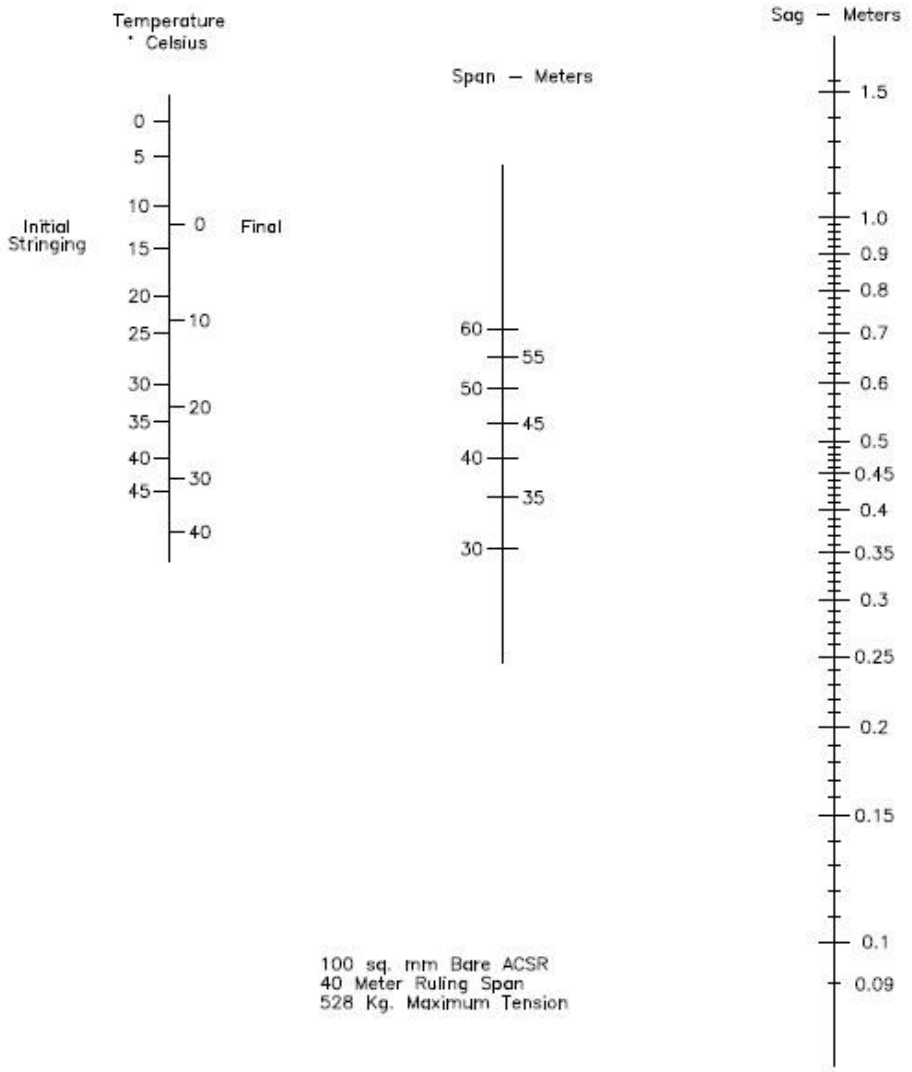

Drawing	Sag Chart	NEPAL ELECTRICITY AUTHORITY
CSG-SAG-01	**100 sq. mm ACSR**	**Community Rural Electricication Department**

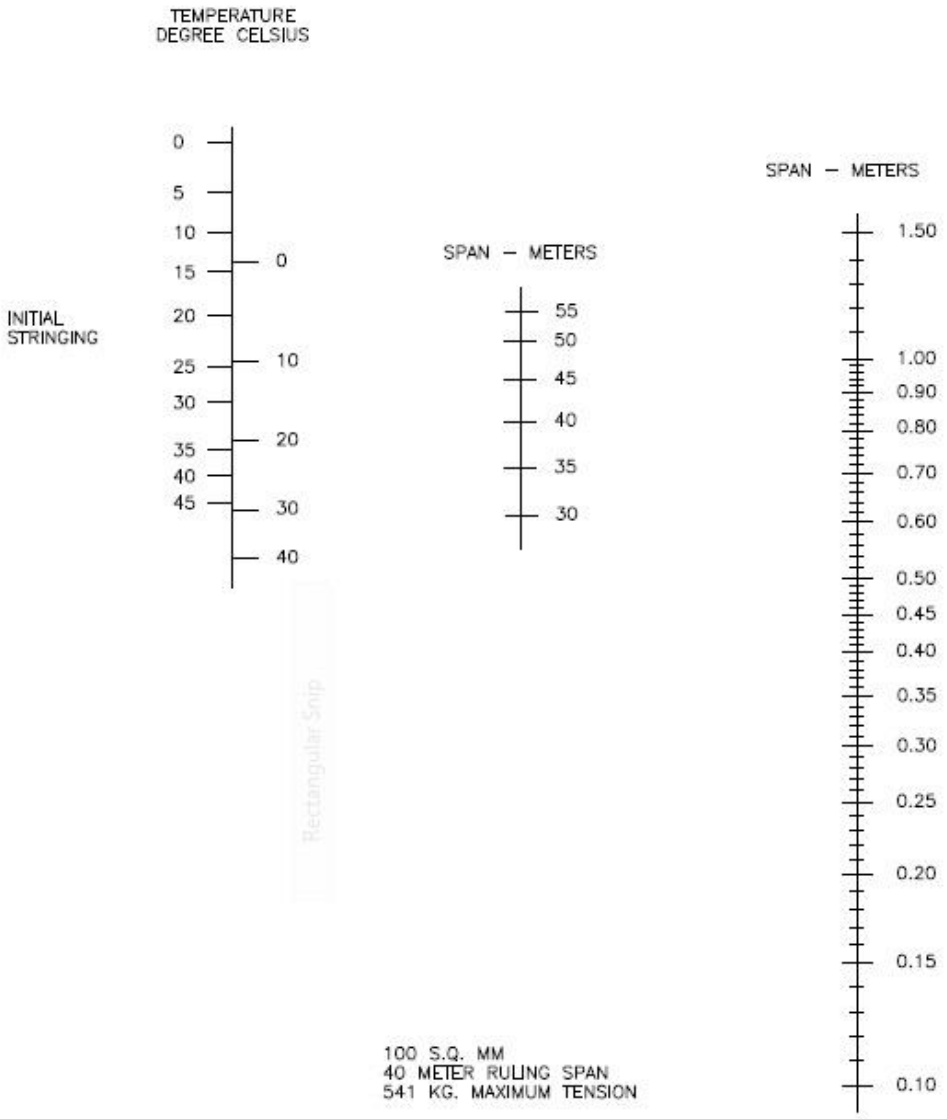

Drawing	Sag Chart	NEPAL ELECTRICITY AUTHORITY
CSG-SAG-02	**100 sq. mm ACSR**	**Community Rural Electricication Department**

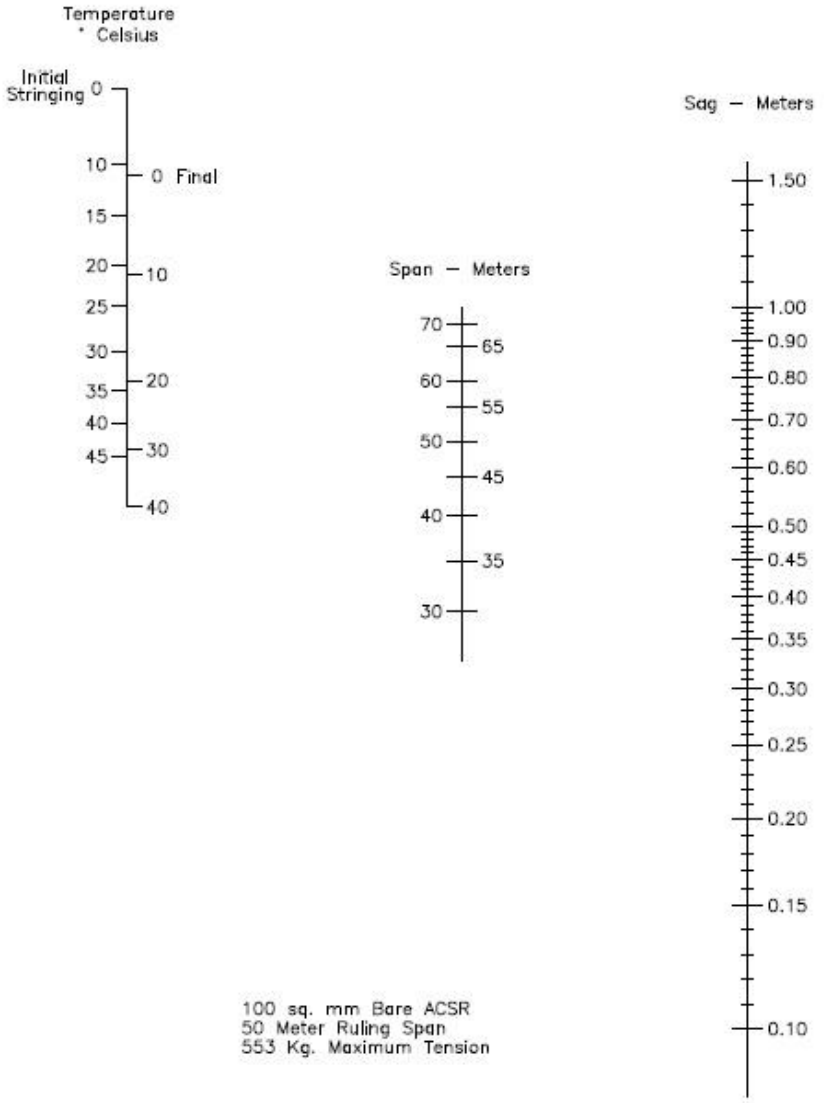

Drawing **CSG-SAG-03**	**Sag Chart** **100 sq. mm ACSR**	NEPAL ELECTRICITY AUTHORITY **Community Rural Electricication Department**

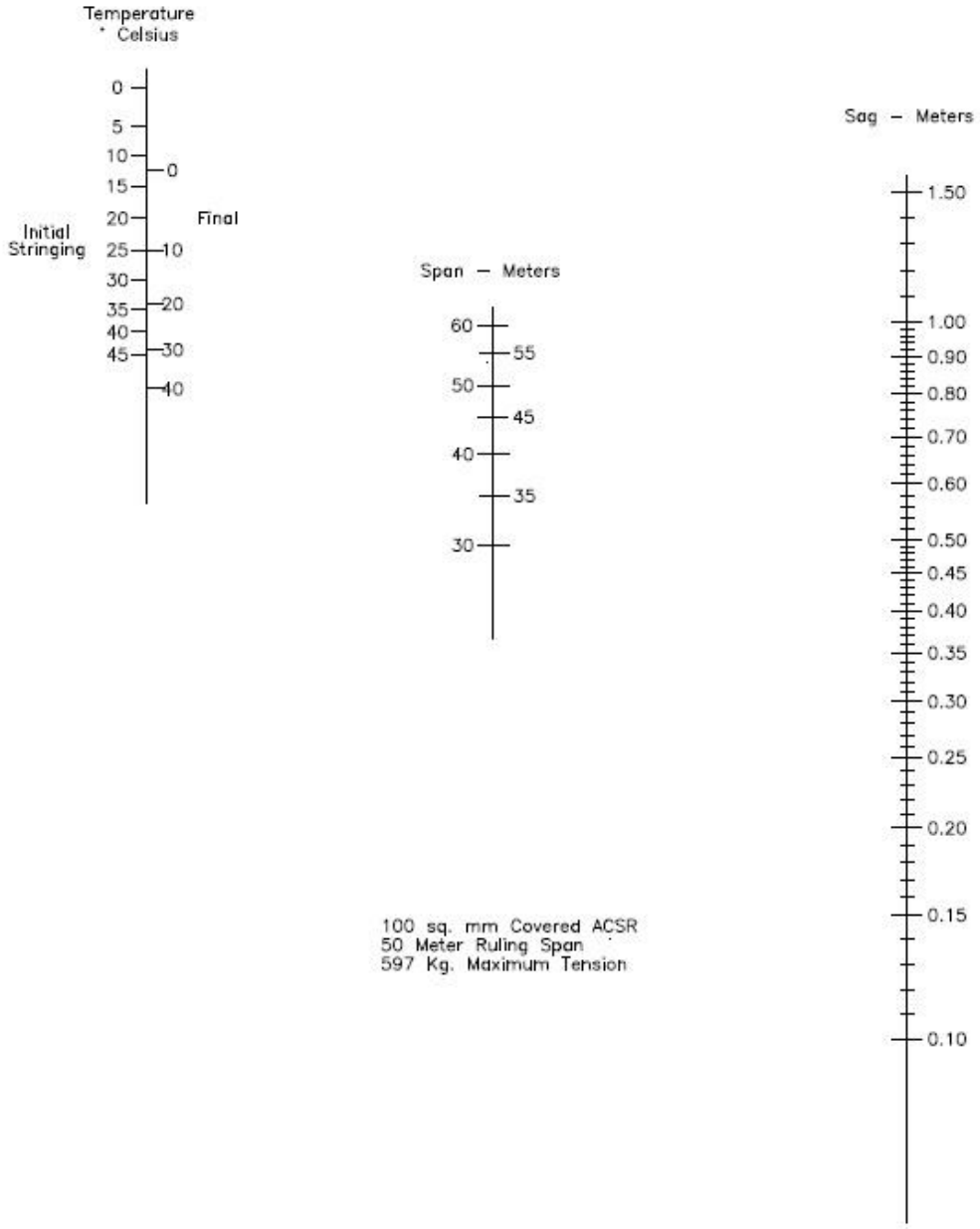

Drawing **CSG-SAG-04**	**Sag Chart** **100 sq. mm ACSR**	NEPAL ELECTRICITY AUTHORITY **Community Rural Electricication Department**

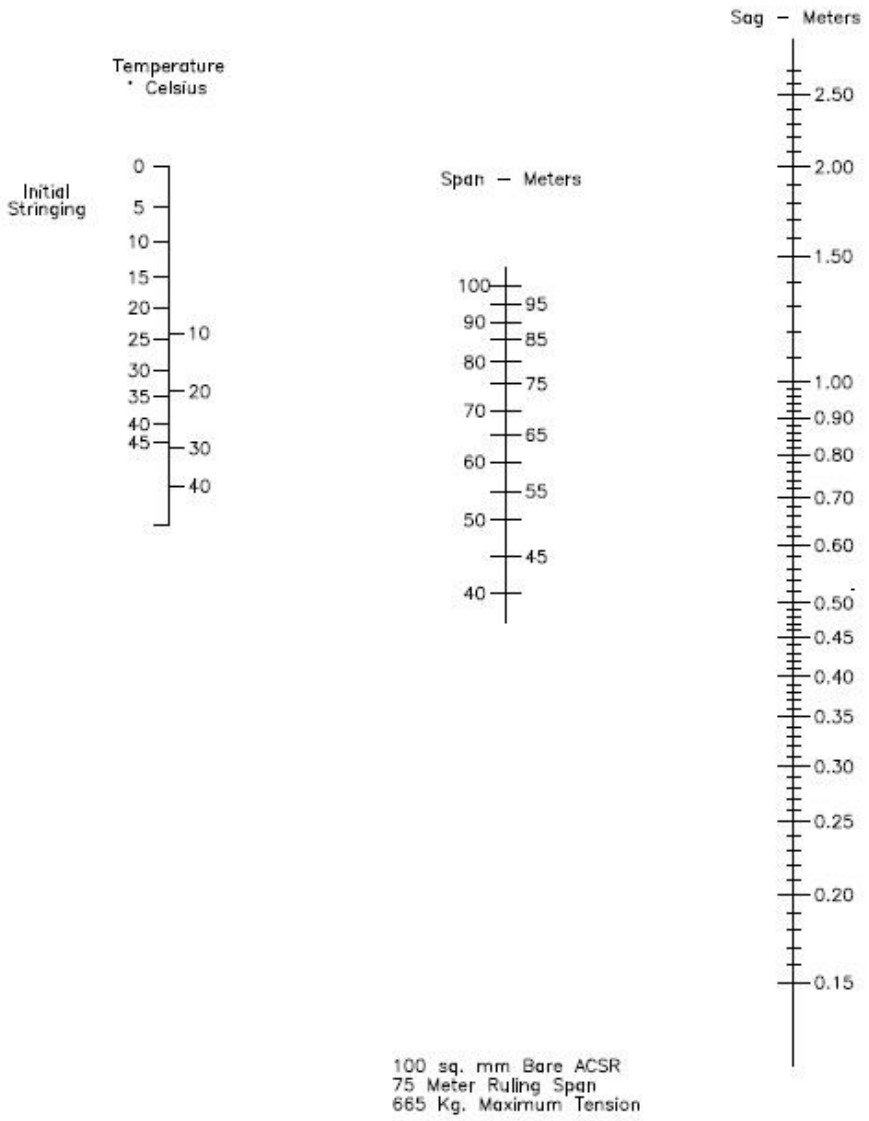

Drawing **CSG-SAG-05**	**Sag Chart** **100 sq. mm ACSR**	NEPAL ELECTRICITY AUTHORITY **Community Rural Electricication Department**

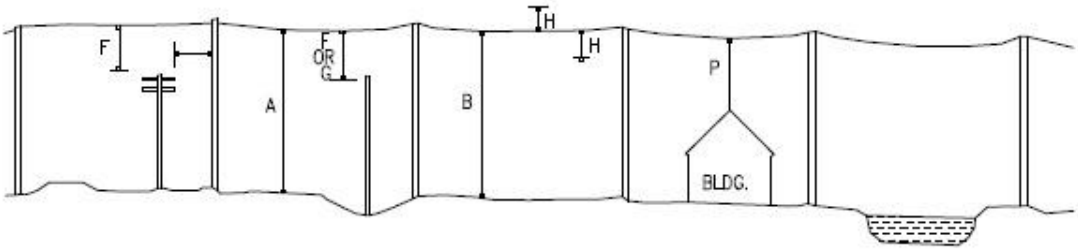

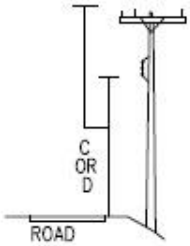

POLES ADJACENT TO ROADS

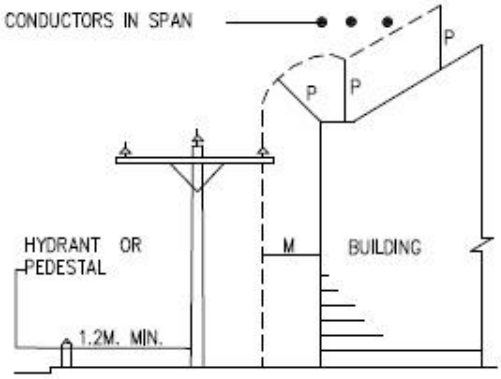

MINIMMUM CLEARANCE FROM BUILDINGS

	CROSSING OVER	VOLTAGE OF CIRCUIT CROSSING	METER
A	ROAD, STREET, HIGHWAY OR LIMITED ACCESS HIGHWAY	230/400 V – 11 KV*	5.80
		11 KV** – 33 KV	6.10
B	AREAS ACCESSIBLE TO PEDESTRIANS ONLY	230/400 V – 11 KV*	4.60
		11 KV** – 33 KV	5.20
	LINE ALONG SIDE OF		
C	MAIN HIGHWAYS, STREETS OR ALLEYS	230/400 V – 11 KV*	5.50
		11 KV** – 33 KV	5.80
D	RURAL ROADS NO VEHICLE CROSSING UNDER	230/400 V – 11 KV*	4.60
		11 KV** – 33 KV	5.20

* Exclusive ** Inclusive

LOCATIONB	VOLTAGE	CLEARANCE (METER)
Min. Horizontal Clearance from Buildings, M	230/400 V – 11 KV**	1.25
	11 KV* – 33 KV	2.00
Min. Vertical Clearance from tallest pt. of Garage, Hut or Wall, P	230/400 V	3.00

CLEARANCE M ALSO SPECIFIED HORIZONTAL CLEARANCE FROM BALCONIES.

Note: While maintaining the above mentioned distances, the maximum deflection due to air swing shall also be calculate.

Drawing CSG-Clr-01	**Conductor Clearance**	NEPAL ELECTRICITY AUTHORITY **Community Rural Electrification Department**

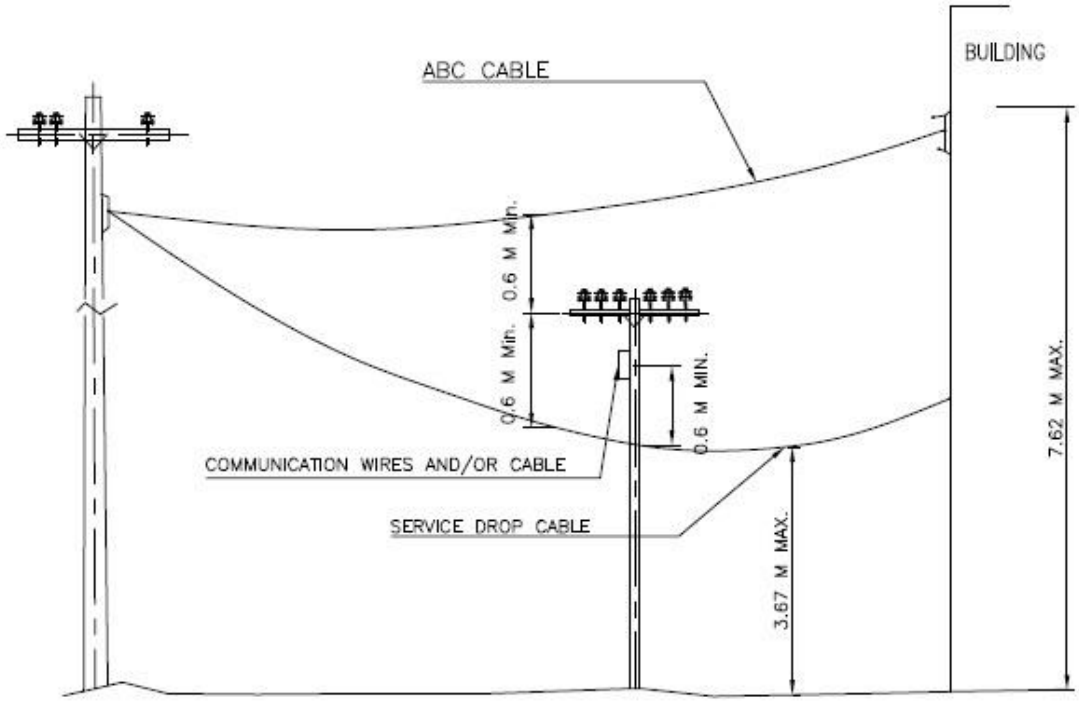

SERVICE DROP

Install service over communication facilities where practical and attach to ploe when available; otherwise cross under communication facilities; with proper clearance.

SERVICE DROP (0–600V) CROSSING OVER	CLEARANCE
DRIVEWAY TO RESIDENCE GARAGE OF OVER PARKING LOT EXCLUDING TRACKS	3.67 M.
DRIVEWAY AND COMMERCIAL PARKING LOT OR AREA SUBJECT TO TRUCK TRAFFIC	4.57 M.

Drawing **CSG-CLR-02**	**Conductor Clearance**	NEPAL ELECTRICITY AUTHORITY **Community Rural Electrification Department**

POLE TOP CROSS ARM

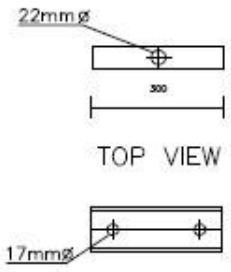

TOP VIEW

FRONT VIEW

STANDARD CROSS ARM

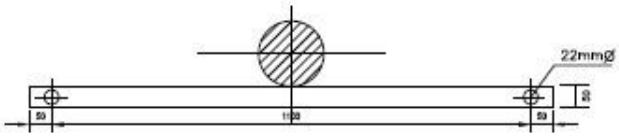

TOP VIEW

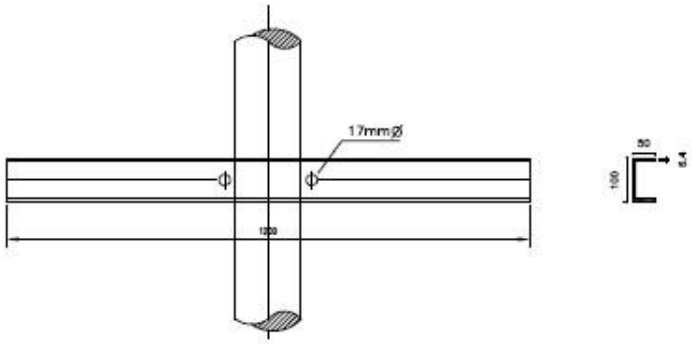

FRONT VIEW

LOCATION OF HOLES TO BE CONFIRMED PRIOR TO MANUFACTURE

Drawing **CS11-LM-01**	**Standard Crossarm** **11 kV Single Pole Structure**	NEPAL ELECTRICITY AUTHORITY **Community Rural Electrification Department**

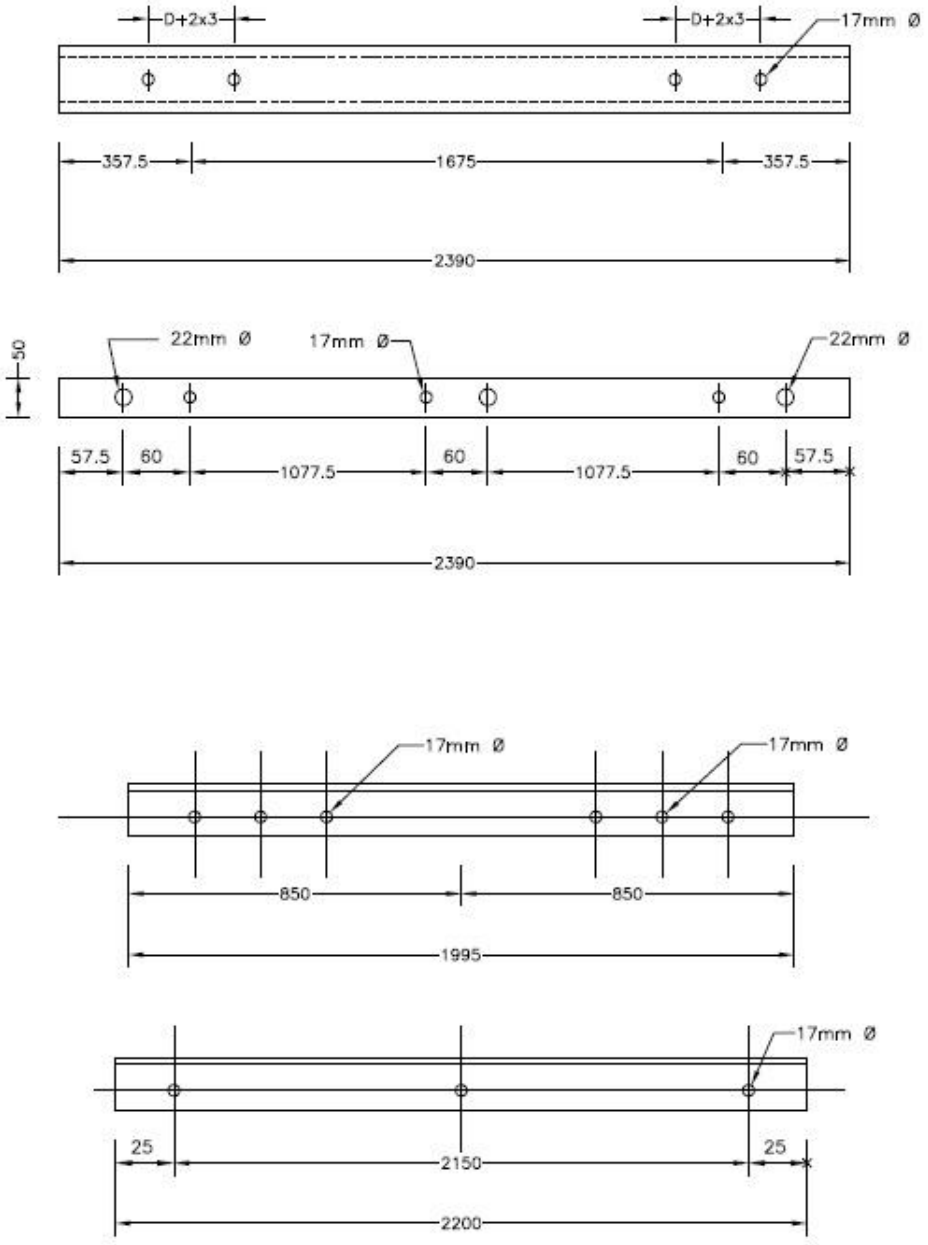

LOCATION OF HOLES TO BE CONFIRMED PRIOR TO MANUFACTURE

Drawing No.: **CS11-LM-02**	Crossarm & Bracing for **11 kV Double Pole (Dead End Type)**	NEPAL ELECTRICITY AUTHORITY **Community Rural Electrical Department**

Other Eligibility

- Notarized Copy of Firm Registration Certificate
- Notarized Copy of Business Registration Certificate
- Notarized Copy of VAT and PAN Registration Certificate,
- Copy of Tax Clearance Certificate/Tax return submission evidence for the F/Y 2073/74.
- A written declaration made by the bidder with a statement that s/he is not ineligible to participate in the procurement proceedings; has no conflict of interest in the proposed procurement proceedings, and has not been punished for a profession or business related offence.
- Notarized Power of Attorney.

Section VI : Sample Forms

1. Quotation and Price Schedules

Date:

To: ***[name and address of the Purchaser]***

Gentlemen and/or Ladies:

Having examined the Sealed Quotation (SQ) documents, we the undersigned, offer to supply and deliver ***[description of goods and services]*** in conformity with the said SQ documents for the sum of ***[total SQ amount in words and figures]*** or such other sums as may be ascertained in accordance with the Schedule of Prices attached herewith and made part of this SQ.

We undertake, if our SQ is accepted, to deliver the goods in accordance with the delivery schedule specified in the Schedule of Requirements.

If our SQ is accepted, we will obtain the guarantee of a bank in a sum equivalent to Five (5) percent of the Contract Price for the due performance of the Contract, in the form prescribed by the Purchaser.

We agree to abide by this SQ for a Period of ***45*** days from the date fixed for SQ opening it shall remain binding upon us and may be accepted at any time before the expiration of that period.

Until a formal Contract is prepared and executed, this SQ, together with your written acceptance thereof and your notification of award, shall constitute a binding Contract between us.

We understand that you are not bound to accept the lowest or any SQ you may receive.

Dated this _____ day of _____ 20_____.

_____ _____

[signature] *[in the capacity of]*

Duly authorized to sign SQ for and on behalf of _____

Nepal Electricity Authority

Distribution and Consumer Service Directorate

Biratnagar Regional Office

1. Price Schedule for Goods and Works

Contract Identification Number: **NEA-BRO-PRJ-2074/075-10 for Electrification Works at Bhojpur District.**

S.N.	Description	Units	Quantity	Rate in Figure	Rate in Words	Amount	Remarks
A.	**Materials Cost**						
1	11 mtr. Steel Tubulor Pole	Nos.	35				Provided by NEA
2	8 mtr. Steel Tubulor Pole	Nos.	35				
3	0.05 Sq. Inch ACSR Conductor	km	1				
4	0.03 Sq. Inch ACSR Conductor	km	1				
6	11 kV Disc Insulator with Grapher	Set	12				
7	11 kV Pin Insulator with Spindle	Set	60				
8	D-iron with Sackle Insulator	Set	50				
11	Cross Arms (4 ft)	Nos.	20				
12	Top Arms (1 ft)	Nos.	20				
13	Pole Clamp	Nos.	44				
14	Flat type bracing	Nos.	40				
16	Stay Set (Complete Set)	Set	15				
17	Stay Wire	kg	75				
18	Nut Bolts	kg	30				
B.	**Total Material Cost With VAT 13%**						
C.	**Labour Cost**						
1	Errection of 11 mtr. Steel Tubulor Pole	Nos.	35				
2	Errection of 8 mtr. Steel Tubulor Pole	Nos.	35				
3	Stringing of 0.05 sq Inch ACSR Conductor, 3 Wire(HT)	km	0.333				

4	Shifting of 0.05 sq Inch ACSR Conductor, 3 Wire(HT)	km	2.000				
5	Re-Stringing of 0.1 sq Inch ACSR Conductor, LT 4 Wire	km	0.250				
6	Shifting of 0.05 sq Inch ACSR Conductor, LT 2 wire	km	2.500				
7	Installation of Stay Set	Set	15				
8	Transportation of Pole, Conductor, Transformer and Other Hardwares from Biratnagar to kot Bhojpur	Lot	1.00				
	Total Labour Cost						
	VAT 13%						
	Total Labour Cost with VAT						
	Grand Total Cost with VAT						

Note : 1. Unit price shall include VAT, all custom duties, taxes, transportation cost to the final destination and insurance cost in material cost only.
2. Unit price shall exclude VAT in labour cost.

Name _____

In the capacity of _____

Signed _____

Duly authorized to sign the Bid for and on behalf of _____

Date _____

2. Bid Security

Date :

To: ***[name and address of the Purchaser]***

Whereas, ***[name of Bidder]*** (hereinafter called "the Bidder") has submitted his Sealed Quotation (SQ) dated ***[date of submission of SQ]*** for the supply of ***[name and/or description of the goods]*** (hereinafter called "the Sealed Quotation").

KNOW ALL PEOPLE by these presents that WE ***[name of Bank]*** of Nepal having our registered office at ***[address of bank]*** (hereinafter called "the Bank") are bound unto ***[name of the procuring entity]*** (hereinafter called "the Purchaser") in the sum of ***[specify amount in figure and words]*** for which payment well and truly to be made to the said Purchaser, the Bank binds itself, its successors, and assigns by these presents. Sealed with the Common Seal of the said Bank this _____ day of _____ 20_____.

THE CONDITIONS of this obligation are:

(1) If, the Bidder withdraws its SQ during the period of bid validity specified by the Bidder on the SQ Form; or

(2) If the Bidder having been notified of the acceptance of its SQ by the Purchaser during the period of bid validity:

   (a) fails or refuses to execute the Contract Form, if required; or

   (b) fails or refuses to furnish the performance security, in accordance with the Instruction to Bidders;

we undertake to pay to the Purchaser up to the above amount upon receipt of its first written demand, without the Purchaser's having to substantiate its demand, provided that in its demand the Purchaser will note that the amount claimed by it is due to it owing to the occurrence of one or both of the two conditions, specifying the occurred condition or conditions.

This guarantee will remain in force up to seventy Five (75) days from the date of opening of the Sealed Quotation, and any demand in respect thereof should reach the Bank not later than the above date.

_____

[signature of the bank]

_____

[common seal of the bank]

3. Form of Agreement

THIS AGREEMENT made the _____ day of _____ 20_____ between *[name of Purchaser]* (hereinafter called "the Purchaser") of the one part and *[name of Supplier]* of *[city and country of Supplier]* (hereinafter called "the Supplier") of the other part:

WHEREAS the Purchaser invited Sealed Quotation for certain goods and ancillary services, viz., *[brief description of goods and services]* and has accepted a SQ by the Supplier for the supply of those goods and services in the sum of *[contract price in words and figures]* (hereinafter called "the Contract Price").

NOW THIS AGREEMENT WITNESSETH AS FOLLOWS:

1. In this Agreement words and expressions shall have the same meanings as are respectively assigned to them in the Conditions of Contract referred to.
2. The following documents shall be deemed to form and be read and construed as part of this Agreement, viz.:
   a. Quotation Form and the Price Schedule submitted by the Supplier;
   b. The Schedule of Requirements;
   c. The Technical Specifications;
   d. The Conditions of Contract; and
   e. The Purchaser's Notification of Award.
3. In consideration of the payments to be made by the Purchaser to the Supplier as hereinafter mentioned, the Supplier hereby covenants with the Purchaser to provide the goods and services and to remedy defects therein in conformity in all respects with the provisions of the Contract.
4. The Purchaser hereby covenants to pay the Supplier in consideration of the provision of the goods and services and the remedying of defects therein, the Contract Price or such other sum as may become payable under the provisions of the contract at the times and in the manner prescribed by the Contract.

IN WITNESS whereof the parties hereto have caused this Agreement to be executed in accordance with their respective laws the day and year first above written.

On behalf of the Purchaser	On behalf of the Supplier
Name:	Name:
Designation:	Designation:
Sign:	Sign:
Seal:	Seal:

4. Performance Security

Date :

To: ***[name and address of the Purchaser]***

WHEREAS ***[name of Supplier]*** (hereinafter called "the Supplier") has undertaken, in pursuance of Contract No. ***[reference number of the contract]*** dated _____ 20_____ to supply ***[description of goods and services]*** (hereinafter called "the Contract").

AND WHEREAS it has been stipulated by you in the said Contract that the Supplier shall furnish you with a bank guarantee by a reputable bank for the sum specified therein as security for compliance with the Supplier's performance obligations in accordance with the Contract.

AND WHEREAS we have agreed to give the Supplier a guarantee:

THEREFORE WE hereby affirm that we are Guarantors and responsible to you, on behalf of the Supplier, up to a total of ***[amount of the guarantee in words and figures]***, and we undertake to pay you, upon your first written demand declaring the Supplier to be in default under the Contract and without cavil or argument, any sum or sums within the limits of [amount of guarantee] as aforesaid, without your needing to prove or to show grounds or reasons for your demand or the sum specified therein.

This guarantee is valid until the _____ day of _____20_____.

Signature and seal of the Guarantors

_____

[name of bank or financial institution]

_____

[address]

_____

[date]

5. Bank Guarantee for Advance Payment

To: ***[name of the Purchaser]***

[name of Contract]

Gentlemen and/or Ladies:

In accordance with the payment provision included in the Contract, which amends Clause 10 of the General Conditions of Contract to provide for advance payment, ***[name and address of Supplier]*** (hereinafter called "the Supplier") shall deposit with the Purchaser a bank guarantee to guarantee its proper and faithful performance under the said Clause of the Contract in an amount of ***[amount of guarantee in figures and words]***.

We, the ***[bank or financial institution]***, as instructed by the Supplier, agree unconditionally and irrevocably to guarantee as primary obligator and not as surety merely, the payment to the Purchaser on its first demand without whatsoever right of objection on our part and without its first claim to the Supplier, in the amount not exceeding ***[amount of guarantee in figures and words]***.

We further agree that no change or addition to or other modification of the terms of the Contract to be performed there under or of any of the Contract documents which may be made between the Purchaser and the Supplier, shall in any way release us from any liability under this guarantee, and we hereby waive notice of any such change, addition, or modification.

The validity period of the guarantee shall be 30 days beyond the period scheduled for repayment of the advance payment and the guarantee shall remain valid and in full effect from the date of the advance payment under the Contract until the Purchaser receives full repayment of the same amount from the Supplier.

Yours truly,

Signature and seal of the Guarantors

_____

[name of bank or financial institution]

_____

[address]

_____

[date]